EPSON

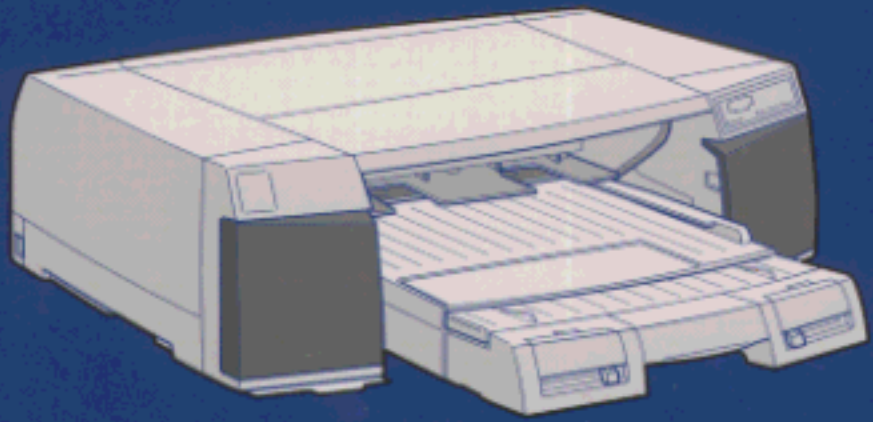

COLOR INK JET PRINTER

EPSON *Stylus*™ Pro 5000

Reference Guide

4008204
S01-00

User's Guide Update

The following additional procedures are necessary when loading paper in the paper tray as described in your EPSON Stylus Pro 5000's Setup Guide Chapter 3 and Reference Guide Chapter 2.

- ❑ After opening the paper tray cover, lift the paper guide roller before loading paper or pulling out the paper tray extension.

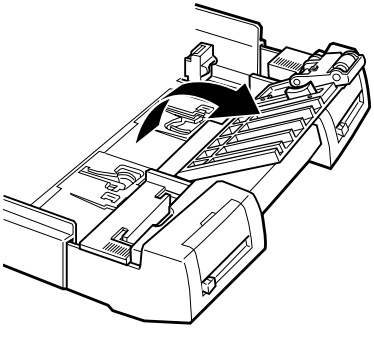

Copyright © 1997 by SEIKO EPSON CORPORATION
Nagano, Japan

4008737
XXX-00

- Set the roller position to match the paper size you are loading by sliding the switch. Set the roller to “Other” when loading paper other than A3 or Ledger size.

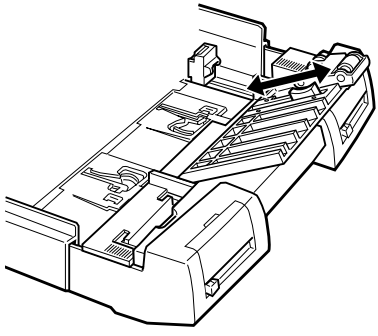

- After paper is loaded, put the paper guide roller back in the paper tray.

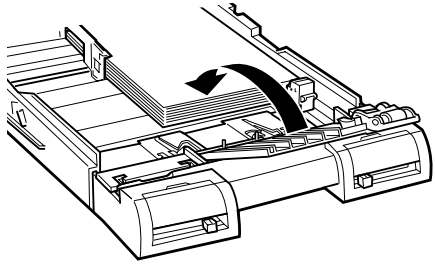

Printed in Japan xx.xx-x.x

Where to Find Information

This Reference Guide

Provides you with detailed information about printing on special paper, using the printer driver and utilities, and provides other tips that will help you get the results you want.

Setup Guide

Provides you with the basic information you need to start using your EPSON Stylus Pro 5000 and its optional and consumable products.

Online Help (Microsoft® Windows® 3.1x, 95, and NT® only)

Provides you with detailed information and instructions on the Windows-based printer software that controls your printer. (Online help will be automatically installed when you install the printer software.) See Chapter 3 for information on accessing online help.

Color Guide

Explains how color printing works and shows you how to get impressive results from your printer.

EPSON® *Stylus*™ Pro 5000

Color Ink Jet Printer

All rights reserved. No part of this publication may be reproduced, stored in a retrieval system, or transmitted in any form or by any means, electronic, mechanical, photocopying, recording, or otherwise, without the prior written permission of SEIKO EPSON CORPORATION. The information contained herein is designed only for use with this EPSON printer. EPSON is not responsible for any use of this information as applied to other printers.

Neither SEIKO EPSON CORPORATION nor its affiliates shall be liable to the purchaser of this product or third parties for damages, losses, costs, or expenses incurred by the purchaser or third parties as a result of: accident, misuse, or abuse of this product or unauthorized modifications, repairs, or alterations to this product, or (excluding the U.S.) failure to strictly comply with SEIKO EPSON CORPORATION's operating and maintenance instructions.

SEIKO EPSON CORPORATION shall not be liable for any damages or problems arising from the use of any options or any consumable products other than those designated as Original EPSON Products or EPSON Approved Products by SEIKO EPSON CORPORATION.

EPSON and EPSON ESC/P are registered trademarks and EPSON ESC/P Raster and EPSON Stylus are trademarks of SEIKO EPSON CORPORATION.

Microsoft and Windows are registered trademarks of Microsoft Corporation.

General Notice: *Other product names used herein are for identification purposes only and may be trademarks of their respective owners. EPSON disclaims any and all rights in those marks.*

Copyright © 1997 by SEIKO EPSON CORPORATION, Nagano, Japan.

Printed on Recycled Paper.

Reference Guide

Declaration of Conformity

According to ISO/IEC Guide 22 and EN 45014

Manufacturer:	SEIKO EPSON CORPORATION
Address:	3-5, Owa 3-chome, Suwa-shi, Nagano-ken 392 Japan
Representative:	EPSON EUROPE B.V.
Address:	Prof. J. H. Bavincklaan 5 1183 AT Amstelveen The Netherlands

Declares that the Product:

Product Name:	Ink Jet Printer
Type Name:	EPSON Stylus Pro 5000
Model:	P990A

Conforms to the following Directive(s) and Norm(s):

Directive 89/336/EEC:

EN 55022 Class B
EN 61000-3-2
EN 61000-3-3
EN 50082-1
IEC 801-2
IEC 801-3
IEC 801-4

Directive 73/23/EEC:

EN 60950

November 1997

Y. Ishii
President of EPSON EUROPE B.V.

Contents

Safety Instructions

Important Safety Instructions 1
A few precautions 2
Warnings, Cautions, and Notes 3
ENERGY STAR Compliance 4
For United Kingdom Users 4

Chapter 1 ***Printing on Various Kinds of Paper***

Choosing Special Paper and Other Media 1-2
EPSON special media 1-2
About special media cleaning sheets 1-6
Printing on Plain Paper, 360 dpi Paper, Photo Quality Paper, Glossy Paper, Ink Jet Cards, and Greeting Cards. 1-7
Printing on Envelopes 1-10
Storing envelopes 1-12
Printing on Photo Quality Glossy Film and Ink Jet Transparencies 1-13
Storing glossy film and transparencies 1-15
Printing on Ink Jet Back Light Film and Photo Quality Self Adhesive Sheets 1-16
Storing Back Light Film and Self Adhesive Sheets 1-18
Printing on Photo Paper 1-18
Notes for EPSON Photo Paper (4 × 6 inches) 1-21
Printing 1-21
Removing the perforated edges 1-22
Storing EPSON Photo Paper 1-22

Chapter 2 **Paper Handling**

Selecting a Paper Path 2-2
Paper Path and Loadable Paper Size 2-3
Paper Tray and Loading Capacity by Media Type 2-5
Loading Paper in a Paper Tray 2-7
    Tips on using a paper tray 2-7
    Loading paper in the standard paper tray 2-8
    Loading paper in the optional lower paper tray 2-15
Loading Paper in the Manual Feed Slots 2-20
    Loading in the front manual feed slot 2-20
    Loading in the rear manual feed slot 2-21

Chapter 3 **Using the Printer Software for Windows**

The Printer Software 3-2
Accessing the Printer Software 3-3
    From Windows applications 3-3
    From Windows 95 or Windows NT 4.0 3-4
    From Windows 3.1 3-4
Using the Automatic Setting 3-5
Using the Predefined Settings 3-6
Customizing the Print Settings 3-8
    Saving your settings 3-9
Making the Media Type Setting 3-10
Modifying the Printout Method and Style 3-12
    Using the Paper menu 3-13
    Using the Layout menu (Windows 95 & NT 4.0 only) 3-14
Checking Print Job & Printer Status 3-16
    Understanding the EPSON Spool Manager 3-16
Getting Information Through Online Help 3-19
    From Windows applications 3-19
    From Windows 95 3-20
    From Windows NT 4.0 3-20
    From Windows 3.1 3-20

Chapter 4 ***Using the Printer Software for Macintosh***

The Printer Software 4-2
Using the Automatic Setting 4-3
Using the Predefined Settings 4-6
Customizing the Print Settings 4-9
- Making your settings 4-9
- Saving your settings 4-10
- Choosing your settings 4-11
- Modifying visual effects 4-11
- Controlling the printing quality 4-16

Changing the Paper Size 4-18
Defining a Custom Paper Size 4-20
Modifying the Printout Method and Style 4-22
Controlling Background Printing 4-25

Chapter 5 ***Using EPSON Printer Utilities***

Introducing the EPSON Printer Utilities 5-2
- EPSON Status Monitor 2 for Windows 95 5-3
- EPSON StatusMonitor for Macintosh 5-4
- Nozzle Check 5-4
- Head Cleaning 5-4
- Print Head Alignment 5-4
- Printer and Option Information (Windows only) 5-5
- Speed & Progress (Windows 95) 5-7
- Configuration (Macintosh) 5-9

Using the EPSON Status Monitor 2 Utility 5-10
- Opening EPSON Status Monitor 2 5-10
- Checking the Printer Status 5-10
- Printer Status window 5-16
- Setting Monitoring Preferences 5-20
- Using the background monitoring icon 5-22

Using the EPSON StatusMonitor (Macintosh) 5-23

Chapter 6 *The Control Panel*

Using the Control Panel 6-2
Using Special Power-On Functions 6-3
Nozzle check and printer settings 6-4
Print head alignment 6-5
Paper size and media type verification 6-7
Parallel interface ECP mode 6-8
Platen gap adjustment for the manual feed slots 6-9

Chapter 7 *Maintenance and Transportation*

Replacing an Ink Cartridge 7-2
Cleaning the Printer 7-6
Transporting the Printer 7-7
Setting up the printer after transporting it 7-9

Chapter 8 *Troubleshooting*

Diagnosing the Problem 8-2
Error indicators 8-2
Status Monitor 8-7
Printer operation check 8-7
Problems and Solutions 8-9
Power supply 8-10
Operation 8-11
Paper handling 8-16
Printing quality 8-20
Printer utilities 8-27
Clearing a Paper Jam 8-29
Increasing the Print Speed 8-31
Using DMA transfer (Windows 95) 8-33
Cleaning the Print Head 8-37
Using the Head Cleaning utility 8-37
Using the control panel 8-40
Aligning the Print Head 8-41
Uninstalling the Printer Software (Windows 95) 8-42

Contacting Customer Support 8-43
For United Kingdom and the Republic of Ireland Users 8-43
For Australian Users 8-46
For Singapore Users 8-48
For Hong Kong Users 8-48
For Philippines Users 8-49

Appendix A ***Specifications***

Technical Specifications A-2
Printing A-2
Paper A-2
Ink cartridges A-6
Mechanical A-8
Electrical A-9
Environmental A-9
Initialization A-9
Safety approvals A-10
Interface Specifications A-11
Parallel interface A-11
Serial interface A-12

Glossary

Index

Safety Instructions

Important Safety Instructions

Read all of these instructions and save them for later reference. Follow all warnings and instructions marked on the printer.

- ❑ Do not place the printer on an unstable surface or near a radiator or heat source.
- ❑ Place the printer on a flat surface. The printer will not operate properly if it is tilted or at an angle.
- ❑ Do not block or cover the openings in the printer's cabinet. Do not insert objects through the slots.
- ❑ Use only the type of power source indicated on the printer's label.
- ❑ Connect all equipment to properly grounded power outlets. Avoid using outlets on the same circuit as photocopiers or air control systems that regularly switch on and off.
- ❑ Do not use a damaged or frayed power cord.
- ❑ If you use an extension cord with the printer, make sure the total ampere rating of the devices plugged into the extension cord does not exceed the cord's ampere rating. Also, make sure the total ampere rating of all devices plugged into the wall outlet does not exceed the wall outlet's ampere rating.
- ❑ Unplug the printer before cleaning. Clean with a damp cloth only. Do not spill liquid on the printer.
- ❑ Except as specifically explained in this guide, do not attempt to service the printer yourself.

- ❑ Unplug the printer and refer servicing to qualified service personnel under the following conditions:

  If the power cord or plug is damaged; if liquid has entered the printer; if the printer has been dropped or the cabinet damaged; if the printer does not operate normally or exhibits a distinct change in performance. Adjust only those controls that are covered by the operating instructions.

- ❑ If you plan to use the printer in Germany, observe the following:

  To provide adequate short-circuit protection and over-current protection for this printer, the building installation must be protected by a 16 Amp circuit breaker.

  Bei Anschluß des Druckers an die Stromversorgung muß sichergestellt werden, daß die Gebäudeinstallation mit einem 16 A-Überstromschalter abgesichert ist.

A few precautions

Even if you are familiar with other types of printers, be sure to read through the following list of precautions before operating your ink jet printer.

- ❑ Do not put your hand inside the printer or touch the ink cartridges during printing.

- ❑ Do not move the print head by hand; otherwise you may damage the printer.

- ❑ Under normal circumstances, ink will not come out of the cartridges. If it does get on your skin, wash it off with soap and water. If it gets in your eyes, flush them immediately with water.

- ❑ Keep ink cartridges out of the reach of children.

- ❑ Do not dismantle the ink cartridges or try to refill them. This could result in damage to the print head.
- ❑ Once you install an ink cartridge, do not lift up the ink cartridge clamp or remove the cartridge except to replace it with a new one. The cartridge may become unusable otherwise.
- ❑ Install the ink cartridge immediately after you remove it from its package. Leaving the cartridge unpacked for a long time before use may result in reduced print quality.
- ❑ Do not use an ink cartridge beyond the date printed on the cartridge carton. For best results, use up the ink cartridges within six months of installing them.
- ❑ Do not shake an ink cartridge; this can cause leakage.
- ❑ Always turn the printer off using the ⏻ Operate button. When this button is pressed, the ⏻ Operate light flashes briefly and then goes out. Do not unplug the printer or turn off the power to the outlet until the ⏻ Operate light is off.
- ❑ Before transporting the printer, make sure the print head is capped in the far right position and the ink cartridges are removed. See page 7-7 “Transporting the Printer” for more information.

Warnings, Cautions, and Notes

Warnings *must be followed carefully to avoid bodily injury.*

Cautions *must be observed to avoid damage to your equipment.*

Notes contain important information and useful tips on the operation of your printer.

ENERGY STAR Compliance

As an ENERGY STAR Partner, EPSON has determined that this product meets the ENERGY STAR guidelines for energy efficiency.

The International ENERGY STAR Office Equipment Program is a voluntary partnership with the computer and office equipment industry to promote the introduction of energy-efficient personal computers, monitors, printers, fax machines, and copiers in an effort to reduce air pollution caused by power generation.

For United Kingdom Users

Use of options

Epson (UK) Limited shall not be liable against any damages or problems arising from the use of any options or consumable products other than those designated as Original EPSON Products or EPSON Approved Products by Epson (UK) Limited.

Safety information

Warning: *This appliance must be earthed. Refer to rating plate for voltage and check that the appliance voltage corresponds to the supply voltage.*

Important: *The wires in the mains lead fitted to this appliance are coloured in accordance with the following code:*

Green and yellow — Earth
Blue — Neutral
Brown — Live

If you have to fit a plug:
As the colours of the mains lead of this appliance may not match coloured markings used to identify the terminals in a plug, please proceed as follows:

The green and yellow wire must be connected to the terminal in the plug which is marked with the letter E or the Earth symbol (⏚).

The blue wire must be connected to the terminal in the plug marked with the letter N.

The brown wire must be connected to the terminal in the plug marked with the letter L.

If damage occurs to the plug, replace the cord set or consult a qualified electrician.

Replace fuses only with a fuse of the correct size and rating.

Chapter 1
Printing on Various Kinds of Paper

Choosing Special Paper and Other Media 1-2
EPSON special media 1-2
About special media cleaning sheets 1-6

Printing on Plain Paper, 360 dpi Paper, Photo Quality Paper, Glossy Paper, Ink Jet Cards, and Greeting Cards. 1-7

Printing on Envelopes 1-10
Storing envelopes 1-12

Printing on Photo Quality Glossy Film and Ink Jet Transparencies 1-13
Storing glossy film and transparencies 1-15

Printing on Ink Jet Back Light Film and Photo Quality Self Adhesive Sheets 1-16
Storing Back Light Film and Self Adhesive Sheets 1-18

Printing on Photo Paper 1-18
Notes for EPSON Photo Paper (4 × 6 inches) 1-21
Printing 1-21
Removing the perforated edges 1-22
Storing EPSON Photo Paper 1-22

Choosing Special Paper and Other Media

You can use most plain bond (normal) paper with your printer and achieve good results. However, coated papers and glossy papers give you better results because they reduce the amount of ink that is absorbed.

Although most types of coated paper will provide you with good printing results, print quality varies depending on the paper quality and the manufacturer. Test the printout quality before purchasing large quantities of paper.

EPSON provides special media such as ink jet (coated) paper, transparencies, glossy paper, glossy film, index cards, and adhesive sheets that are formulated for the inks used in EPSON ink jet printers. EPSON recommends you use media distributed by EPSON to ensure high-quality results.

EPSON also provides special media that can enrich the usage and expressive power of the printing results, such as EPSON Ink Jet Back Light Film. EPSON Ink Jet Back Light Film has a frosted-glass like printable surface and a glossy surface on its reverse side. Printing on this film gives a crisp, translucent image for use in back-lit displays.

EPSON special media

Refer to the table below to find the best choice for your printing needs. When you use one of the following media types, make sure the appropriate settings are made in the printer driver as described in Chapter 3 (Windows) and Chapter 4 (Apple® Macintosh®). Also be sure to load the paper according to the instructions in Chapter 2, “Paper Handling.”

The product names of some EPSON media currently on the market may vary depending on when it was distributed. The following table lists media types whose product names have changed. The media names used in this manual are shown in the "Current Name" column, and the former names for the same media are shown in brackets. The quality and use of this media are the same regardless of the name on the media.

EPSON special media

Current name (former name)	**Sizes available**	**Product code**	**Characteristics, application**
360 dpi Ink Jet Paper (Special Coated Paper for 360 dpi printing)	A4 Letter A3 Super A3/B	S041059 S041025 S041060 S041028 S041065 S041046 S041066 S041047	This media is best suited for printing handouts of business presentations that contain color charts and images, and drafts of your most important printouts.
Photo Quality Ink Jet Paper (Special Coated Paper for 720 dpi printing)	A4 Letter Legal A3 B Super A3/B	S041061 S041026 S041062 S041029 S041067 S041048 S041068 S041045 S041070 S041044 S041069 S041043	This media provides you with high quality printing at reasonable cost. It is best suited for printing illustrations, graphics, and photo images.
Photo Quality Ink Jet Card (Special Coated Index Card for 720 dpi printing)	A6 5 × 8 inch 8 × 10 inch	S041054 S041121 S041122	This size of photo quality ink jet cards enables you to mail your family and friends impressive greeting cards. EPSON also provides envelopes with some Ink Jet Card packages.
Photo Quality Glossy Paper	A4 Letter A3 Super A3/B	S041126 S041124 S041125 S041133	This media gives you the highest quality printout at moderate printing costs. The glossy surface provides you with a photo-like finish.

Current name (former name)	Sizes available	Product code	Characteristics, application
Photo Paper	4 × 6 inch A4 Letter A3 Super A3/B Panoramic	S041134 S041140 S041141 S041142 S041143 S041145	This media gives you the highest quality printouts at moderate printing costs. The glossy surface provides you with a photo-like finish. It is best for high resolution printing. Also a variety of sizes is available for this paper, such as 4 × 6 inch and panoramic. 4 × 6 inch EPSON Photo Paper is perforated around the margins so you can trim your printed images to look like photographs.
Photo Quality Glossy Film (High Quality Glossy Paper)	A6 A4 Letter A3 B Super A3/B	S041107 S041071 S041072 S041073 S041075 S041074	This media gives you the highest possible quality printing results. The glossy surface provides you with a photo-like finish. It is best suited for the kind of professional work done by artists and designers.
Ink Jet Tranparencies (Transparency Film)	A4 Letter	S041063 S041064	Provides you with the opportunity to impress clients and associates with high quality transparencies.
Photo Quality Self Adhesive Sheet	A4	S041106	Allows you to peel off your printout and stick it onto most surfaces.
Ink Jet Back Light Film	A3	S041131	This media has a frosted-glass like printable surface and glossy surface on its reverse side. Printing on this film gives a crisp, translucent image for use in back-lit displays.

Caution:

- *Use EPSON special paper under normal room environment (temperature and humidity) to obtain the best results.*
- *Keep your fingers off the printable surface of the paper. Fingerprints may deteriorate the print quality.*
- *Keep unused paper in its original packaging and store it in a cool, dry place to avoid a decline in quality.*

Note:

- *When loading special paper distributed by EPSON, read the instruction sheets packed with your special media first.*
- *The availability of special media varies by country.*
- *Since the name on the special media packaging may vary in certain markets, you may need to use the product number to confirm the type of special media you need or have.*

About special media cleaning sheets

A4 size cleaning sheets packed with EPSON special media can be used with this printer. Cleaning sheets are also available separately. Using a cleaning sheet can remove paper dust in the paper paths. If a paper tray is not feeding properly, use a cleaning sheet.

Follow the steps below to use the cleaning sheet.

1. Load the cleaning sheet long edge first and adhesive side up, as shown below, in the paper tray that is not feeding paper properly. Make sure no paper is loaded in other paper paths.

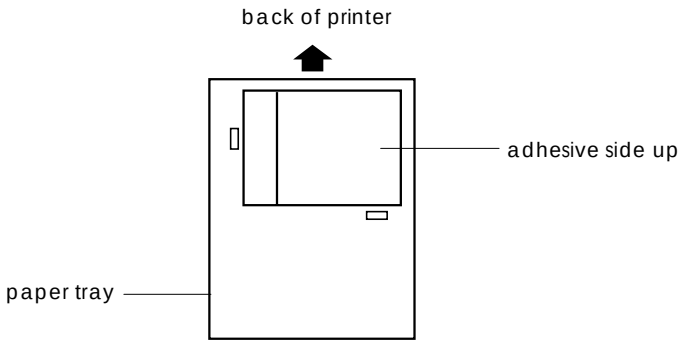

Caution:
You can use only A4 size cleaning sheets. Do not use A3 size cleaning sheets packed with some A3 size EPSON special media.

2. Press the Eject button on the control panel to load and eject the sheet.

3. Remove the ejected cleaning sheet.

4. Repeat steps 1 through 3 a few times.

If the cleaning sheet jams in the printer and does not eject, open the printer and remove the sheet. See page 8-29 for instructions on clearing paper jams.

Printing on Plain Paper, 360 dpi Paper, Photo Quality Paper, Glossy Paper, Ink Jet Cards, and Greeting Cards.

Follow the instructions below to print on plain paper, 360 dpi Ink Jet Paper, Photo Quality Ink Jet Paper, Photo Quality Glossy Paper, Ink Jet Note Cards, Ink Jet Greeting Cards, and Photo Quality Ink Jet Cards.

1. See the table below, and determine the most appropriate paper path. Then load paper according to the instructions in Chapter 2, "Paper Handling."

Paper path	Printable side	Remarks
Paper tray	Down	Paper capacity varies depending on the media type. See page 2-5 for information. For Ink Jet Cards, put a support sheet under the cards. For Photo Quality Glossy Paper, do not use a support sheet even if it is packed with the paper. Before loading Glossy Paper, make sure to fan the stack of paper.
Lower paper tray		
Front manual feed slot	Down	You can load one sheet at a time.
Rear manual feed slot	Up	

Note:
The paper sizes you can load and the direction you load the paper varies depending on the paper path. See page 2-3 for details.

2. Set the paper size and media type levers to match the size and type of paper loaded. Set the media type and paper size levers to the Other position if you are unsure of the correct settings.

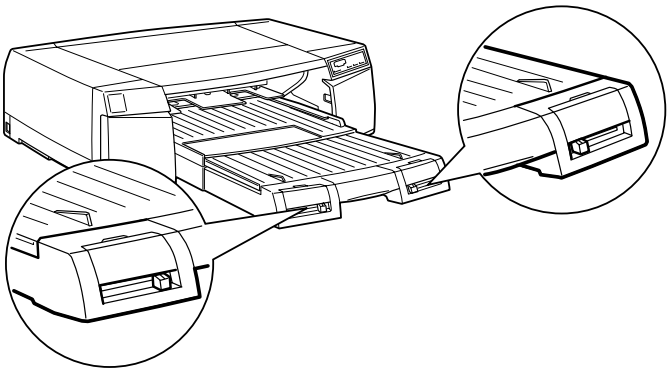

Paper	Media type lever position
Plain paper	Plain Paper
360 dpi Ink Jet Paper	360 dpi Paper
Photo Quality Ink Jet Paper	Photo Quality Paper
Photo Quality Glossy Paper	Glossy Paper
Photo Quality Ink Jet Card	Photo Quality Paper
Ink Jet Note Cards	Photo Quality Paper
Ink Jet Greeting Cards	Photo Quality Paper

Note:
If ink smears on your document, set the media type lever to Thick Paper.

3. Open the document you want to print, and click Print or Page Setup on the File menu. Click Options, Properties, Printer, Setup, or a combination of these buttons to open the printer driver. For detailed information on opening the printer driver and making printer driver settings, see Chapter 3 (Windows) or Chapter 4 (Macintosh).

4. Select the paper path from the Paper Source list on the Paper menu you use for Windows, or in the Page Setup dialog box for Macintosh.

5. Select the size of the paper you loaded from the Paper Size list on the Paper menu for Windows, or in the Page Setup dialog box for Macintosh.

6. Select the type of paper you loaded from the Media Type list on the Main menu for Windows, or in the Print dialog box for Macintosh.

Paper	Media Type option
Plain paper	Plain Paper
360 dpi Ink Jet Paper	360 dpi Ink Jet Paper
Photo Quality Ink Jet Paper	Photo Quality Ink Jet Paper
Photo Quality Glossy Paper	Photo Quality Glossy Paper
Photo Quality Ink Jet Card	Photo Quality Ink Jet Paper
Ink Jet Note Cards	Photo Quality Ink Jet Paper
Ink Jet Greeting Cards	Photo Quality Ink Jet Paper

7. Click Close, OK, or Print to print. You may need to click a combination of these buttons.

Storing paper

Return unused paper to the original package as soon as you finish printing, and avoid storing it in places exposed to high temperature, humidity, or direct sunlight.

EPSON recommends storing your printouts in a resealable plastic bag and keeping them away from high temperature, humidity, and direct sunlight.

Printing on Envelopes

To print on envelopes, follow the instructions below:

1. See the table below, and determine the most appropriate paper path. Then load an envelope according to the instructions in Chapter 2, “Paper Handling.”

Paper path	Direction	Remarks
Paper tray	Flap side up with the flap edge to the left. See the illustration below. For C5 envelopes, load the flap edge (short edge) first with the flap side up (printable surface down).	You can load up to 10 envelopes in the paper tray.
Lower paper tray	Unavailable	You cannot load envelopes in the lower paper tray.
Front manual feed slot	Unavailable	You cannot load envelopes in the front manual feed slot.
Rear manual feed slot	Flap side down with the flap edge to the left when facing the front of the printer. Flap side down with the flap edge to the right when facing the back of the printer. See illustration below. For C5 envelopes, load the flap edge (short edge) first with the flap side down (printable surface up).	You can load one envelope at a time.

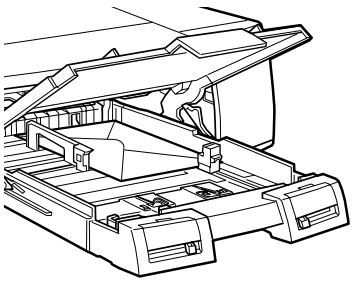

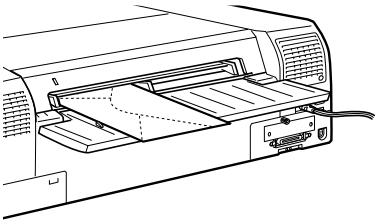

2. Set the paper size lever to Envelope and set the media type lever to match the type of envelope you load in the paper tray. If the envelope is a normal one, select Plain Paper. Set the lever to Other if you are unsure of the type of envelope you load.

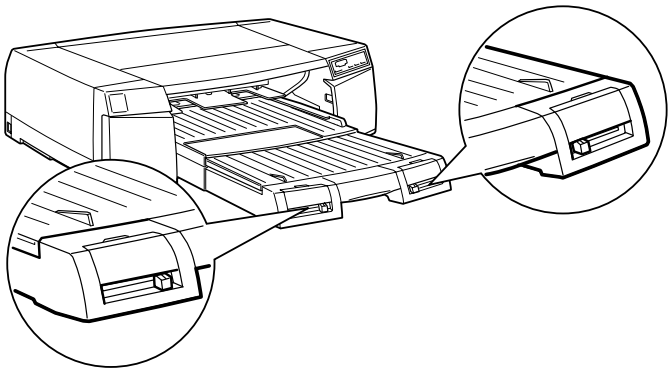

Note:
Do not load envelopes in the optional lower paper tray or in the front manual feed slot.

3. Open the application you want to print from, and click Print or Page Setup on the File menu. Click Options, Properties, Printer, Setup, or a combination of these buttons to open the printer driver. For detailed information on opening the printer driver and making printer driver settings, see Chapter 3 (Windows) or Chapter 4 (Macintosh).

4. Select the paper path you use from the Paper Source list on the Paper menu for Windows, or in the Page Setup dialog box for Macintosh.

5. Select the size of the envelope you loaded from the Paper Size list on the Paper menu for Windows, or in the Page Setup dialog box for Macintosh.

6. Verify the orientation setting on the Paper menu for Windows or in the Page Setup dialog box for Macintosh, and make the setting if necessary.

7. Select the type of envelope you loaded from the Media Type list on the Main menu for Windows or in the Print dialog box for Macintosh. If the envelope is a normal one, select Plain Paper.

8. Click Close, OK, or Print to print. You may need to click a combination of these buttons.

Storing envelopes

Return unused envelopes to the original package as soon as you finish printing, and avoid storing them in places exposed to high temperature, humidity, or direct sunlight.

EPSON recommends storing your printouts in a resealable plastic bag and keeping them away from high temperature, humidity, and direct sunlight.

Printing on Photo Quality Glossy Film and Ink Jet Transparencies

When printing on Photo Quality Glossy Film and Ink Jet transparencies, please follow the instructions below:

1. See the table below, and determine the most appropriate paper path. Then load transparencies or glossy film according to the instructions in Chapter 2, “Paper Handling.”

Paper path	**Printable side**	**Remarks**
Paper tray Lower paper tray	Down: load the transparency or glossy film in the paper tray with the cut corner located on the right side of the trailing edge. 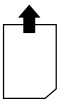	Paper loading capacity varies depending on the media type. See page 2-5. If a support sheet is packed with the Glossy Film, put the support sheet or a piece of plain paper under the stack of Glossy Film.
Front manual feed slot	Down: load the transparency or glossy film in the front manual feed slot with the cut corner located on the right side of the trailing edge. 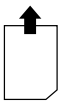	You can load one sheet at a time.
Rear manual feed slot	Up: load the transparency or glossy film in the rear manual feed slot with the cut corner located on the right side of the trailing edge. 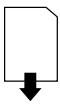	

Note:
The paper sizes you can load and the direction you load the paper varies depending on the paper path. See page 2-3 for details.

2. Set the paper size and media type levers to match the paper you loaded. Set the media type and paper size levers to the Other position if you are unsure of the correct settings.

Paper	Media type lever position
Photo Quality Glossy Film	Glossy Film
Ink Jet Transparencies	Transparencies

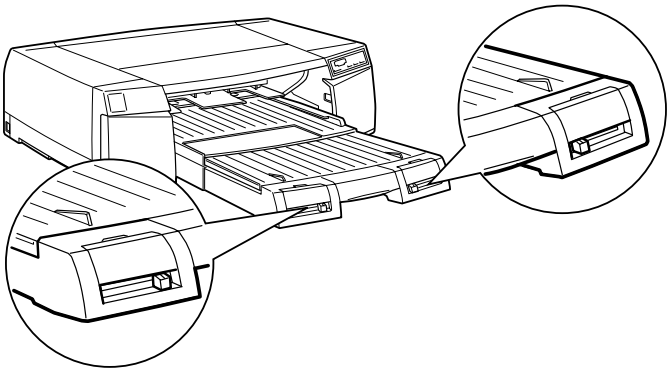

3. Open the document you want to print, and click Print or Page Setup on the File menu. Click Options, Properties, Printer, Setup, or a combination of these buttons to open the printer driver. For detailed information on opening the printer driver and making printer driver settings, see Chapter 3 (Windows) or Chapter 4 (Macintosh).

4. Select the paper path you use from the Paper Source list on the Paper menu for Windows or in the Page Setup dialog box for Macintosh.

5. Select the size of the paper you loaded from the Paper Size list on the Paper menu for Windows or in the Page Setup dialog box for Macintosh.

6. Select the type of paper you loaded from the Media Type list on the Main menu for Windows or in the Print dialog box for Macintosh.

Paper	Media Type option
Photo Quality Glossy Film	Photo Quality Glossy Film
Ink Jet Transparencies	Ink Jet Transparencies

7. Click Close, OK, or Print to print. You may need to click a combination of these buttons.

8. If you print multiple transparencies or sheets of glossy film, take them out of the printer immediately after each one is printed and do not lay them on top of each other. When the ink is dry, insert plain paper as a separator between your printed transparencies or glossy film to keep them from sticking together.

Storing glossy film and transparencies

Return unused paper to the original package as soon as you finish printing, and avoid storing it in places exposed to high temperature, humidity, or direct sunlight.

EPSON recommends storing your printouts in a resealable plastic bag and keeping them away from high temperature, humidity, and direct sunlight.

Printing on Ink Jet Back Light Film and Photo Quality Self Adhesive Sheets

When printing on Ink Jet Back Light Film or Photo Quality Self Adhesive Sheets, please follow the instructions below:

1. See the table below, and determine the most appropriate paper path. Then load film or adhesive sheets according to the instructions in Chapter 2, "Paper Handling."

Paper path	Printable side	Remarks
Paper tray	Unavailable	You cannot load Back Light Film or Photo Quality Self Adhesive Sheet in the paper trays.
Lower paper tray		
Front manual feed slot	Down	You can load one sheet at a time.
Rear manual feed slot	Up	

Note:

- ❑ *The paper sizes you can load and the direction you load the paper varies depending on the paper path. See page 2-3 for details.*

- ❑ *EPSON Ink Jet Back Light Film tends to curl even under normal storage conditions. If it curls, flatten it before you load the film.*

2. Open the document you want to print, and click Print or Page Setup on the File menu. Click Options, Properties, Printer, Setup, or a combination of these buttons to open the printer driver. For detailed information on opening the printer driver and making printer driver settings, see Chapter 3 (Windows) or Chapter 4 (Macintosh).

3. Select the paper path you use from the Paper Source list on the Paper menu you use for Windows or in the Page Setup dialog box for Macintosh.

4. Select the size of the film or sheet you loaded from the Paper Size list on the Paper menu for Windows or in the Page Setup dialog box for Macintosh.

5. Select the type of paper you loaded from the Media Type list on the Main menu for Windows or in the Print dialog box for Macintosh.

Paper	Media type
Ink Jet Back Light Film	Ink Jet Back Light Film
Photo Quality Self Adhesive Sheet	Photo Quality Ink Jet Paper

Note:
EPSON Ink Jet Back Light Film is designed to print images backwards, using the printer driver's Flip Horizontal feature, so that viewing the printout from the unprinted side gives the correct image. To use the Flip Horizontal feature, select Ink Jet Back Light Film *as the Media Type or select* Flip Horizontal*, but do not select both.*

6. Click Close, OK, or Print to print. You may need to click a combination of these buttons.

7. If you print multiple sheets, take them out of the printer immediately after each one is printed and do not lay them on top of each other. When the ink is dry, insert plain paper as a separator between your printouts to keep them from sticking together.

Storing Back Light Film and Self Adhesive Sheets

Return unused paper to the original package as soon as you finish printing, and avoid storing it in places exposed to high temperature, humidity, or direct sunlight.

EPSON recommends storing your printouts in a resealable plastic bag and keeping them away from high temperature, humidity, and direct sunlight.

Printing on Photo Paper

EPSON provides three types of Photo Paper:

Type	Name	Size	Product number
Cut sheet (regular size)	Photo Paper (A4) Photo Paper (Letter) Photo Paper (A3) Photo Paper (Super A3/B)	A4 Letter A3 A3+	S041140 S041141 S041142 S041143
Perforated sheet	Photo Paper (4 x 6 inches)	4 × 6 inches (102 × 152 mm)	S041134
Cut sheet (special size)	Panoramic Photo Paper	210 × 594 mm	S041145

Note:

- *EPSON Photo Paper (4 × 6 inches) is perforated around the margins so you can trim your printed images to look like 4 × 6 inch (102 × 152 mm) photographs.*
- *EPSON Photo Paper (panoramic) is best suited for printing photos taken in panorama mode.*

When printing on Photo Paper, follow the instructions below:

1. See the table below, and determine the most appropriate paper path. Then load Photo Paper according to the instructions in Chapter 2, "Paper Handling."

Paper path	Printable side	Remarks
Paper tray	Down	Paper loading capacity varies depending on the media type. See page 2-5. Put the support sheet or a piece of plain paper under the stack of paper.
Lower paper tray		
Front manual feed slot	Down	You can load one sheet at a time.
Rear manual feed slot	Up	

Note:

- ❑ *The paper sizes you can load vary depending on the path. See page 2-3 for details.*

- ❑ *Load Photo Paper (4 × 6 inches) with the perforated margins positioned as shown below.*

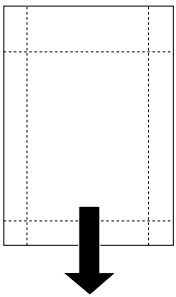

loading position

- ❑ *Use flat, undamaged paper. If the paper or the support sheet is curled, flatten it before loading to avoid paper feeding problems.*

2. Set the paper size lever to match the type of paper you loaded and set the media type lever to the Glossy Paper position.

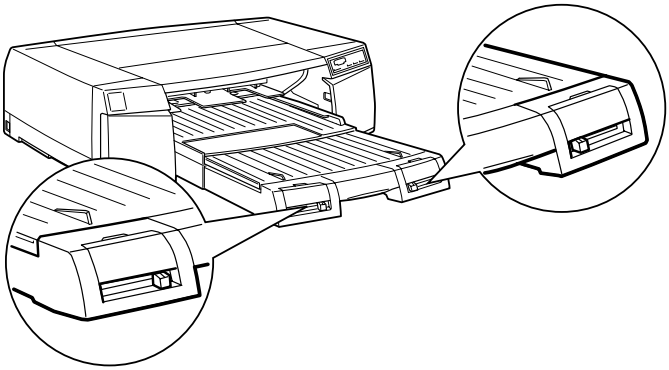

3. Open the document you want to print, and click Print or Page Setup on the File menu. Click Options, Properties, Printer, Setup, or a combination of these buttons to open the printer driver. For detailed information on opening the printer driver and making printer driver settings, see Chapter 3 (Windows) or Chapter 4 (Macintosh).

4. Select the paper path you use from the Paper Source list on the Paper menu for Windows or in the Page Setup dialog box for Macintosh.

5. Select the size of the paper you loaded from the Paper Size list on the Paper menu for Windows or in the Page Setup dialog box for Macintosh.

Photo Paper type	Paper Size options
Cut sheet (regular size)	A4, Letter, A3, Super A3/B
Perforated sheet	Photo Paper 4 × 6 in.
Cut sheet (special size)	Panoramic 210 × 594 mm

6. Select Photo Quality Glossy Paper as the Media Type setting from the Media Type list on the Main menu for Windows or in the Print dialog box for Macintosh.

7. Click Close, OK, or Print to print. You may need to click a combination of these buttons.

Notes for EPSON Photo Paper (4 × 6 inches)

Please note the following when using this paper:

Printing

- ❑ The outside edge of your image might be cut off when you remove the perforated margins.

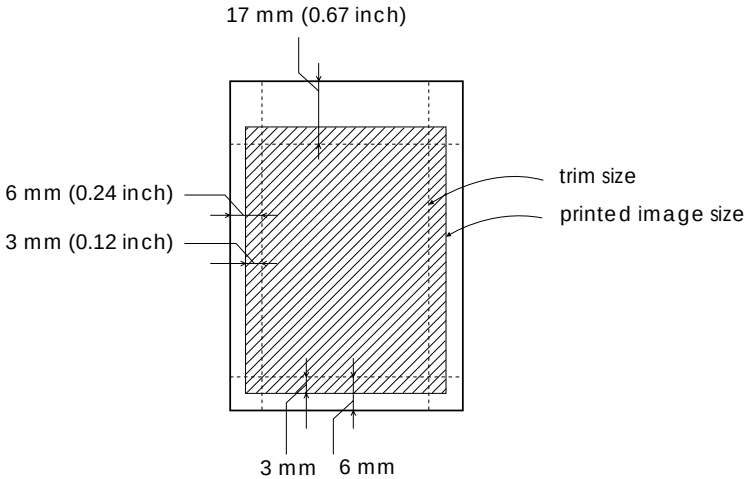

- ❑ You can also print with black ink on the non-coated side (EPSON logo side) of Photo Paper. To print on this side, select 360 dpi Ink Jet Paper as the Media Type setting and EPSON Photo Paper 4 × 6 in as the Paper Size setting.

- ❑ Cut or tear the paper at the perforation only after printing. Do not cut, tear, or fold the paper before printing.

Removing the perforated edges

Using scissors, cut along the perforations to remove the edges of the Photo Paper. You can also fold the paper back and forth a few times along the perforations, as shown below, and then carefully tear the paper along the perforations ot remove the edges.

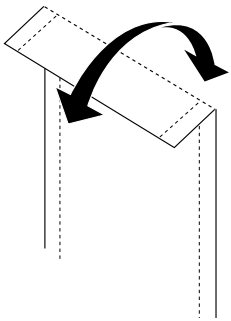

Storing EPSON Photo Paper

Return unused paper to the original package as soon as you finish printing, and avoid storing it in places exposed to high temperature, humidity, or direct sunlight.

EPSON recommends storing your printouts in a resealable plastic bag and keeping them away from high temperature, humidity, and direct sunlight.

Insert plain paper as a separator between your printouts to keep them from sticking together.

Chapter 2

Paper Handling

2

Selecting a Paper Path 2-2

Paper Path and Loadable Paper Size 2-3

Paper Tray and Loading Capacity by Media Type 2-5

Loading Paper in a Paper Tray 2-7
- Tips on using a paper tray 2-7
- Loading paper in the standard paper tray 2-8
- Loading paper in the optional lower paper tray 2-15

Loading Paper in the Manual Feed Slots 2-20
- Loading in the front manual feed slot 2-20
- Loading in the rear manual feed slot 2-21

Selecting a Paper Path

Your printer has three paper paths to choose from, and if you purchase an optional 250 Sheet Lower Paper Cassette, you will have a fourth paper path to choose from.

Paper tray

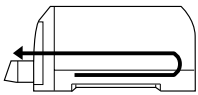

Front manual feed slot

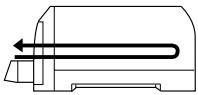

Rear manual feed slot

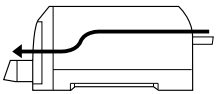

Lower Paper Tray (optional)

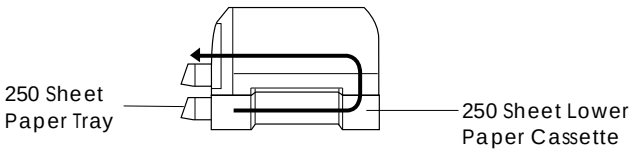

Note:

- ❑ *The paper loading capacity in the paper tray varies depending on the paper type. See the following section for details.*
- ❑ *You can only load one sheet at a time in the manual feed slots.*

Paper Path and Loadable Paper Size

The paper sizes you can load vary depending on the paper path you use. The table below shows loadable paper sizes and available paper paths.

Paper source and paper size compatibility

Paper size (and loading direction[*1])	**Front manual feed slot[*2]**	**Rear manual feed slot**	**Paper tray[*3]**	**Lower paper tray (optional)[*4]**
Photo Paper (4×6")	–	○	○	–
Index card 5×8"	–	○	○	–
Index card 8×10"	–	○	○	–
DL Envelope	–	○	○	–
C6 Envelope	–	○	○	–
C5 Envelope	–	○	○	–
#10 Envelope	–	○	○	–
Letter (landscape)	–	○	○	○
A4 (landscape)	–	○	○	○
Half Letter	–	○	○	–
Executive	○	○	○	○
Letter	○	○	○	○
Legal	○	○	○	○
ledger	○	○	○	○

Paper size (and loading direction[*1])	Front manual feed slot[*2]	Rear manual feed slot	Paper tray[*3]	Lower paper tray (optional)[*4]
A6	–	○	○	–
A5	–	○	○	–
A4	○	○	○	○
A3	○	○	○	○
Super A3/B	○	○	○	○
Panoramic (210 × 594 mm)	–	○	–	–
Other, up to 44 inches	–	○	–	–

○ = loadable, – = unloadable

[*1] Load short edge first (portrait), unless otherwise specified.
[*2] The front manual feed slot can only feed paper longer than 257 mm.
[*3] The paper tray can only feed paper longer than 182 mm.
[*4] The optional lower paper tray can only feed paper longer than 182 mm, but cannot feed thick paper such as index cards and envelopes.

Note:
For certain media types, there are a few exceptions to the available paper paths shown above. Refer to Chapter 1, "Printing on Various Kinds of Paper," for more information on specific media types.

Paper Tray and Loading Capacity by Media Type

The loadable capacity varies depending on the media type and paper tray you use. The table below describes loadable quantities and location of paper trays.

Paper source and loading capacity by media type

Media type	Paper tray	Lower paper tray (optional)	Remarks
360 dpi Ink Jet Paper	200	200	
Photo Quality Ink Jet Paper	200	200	
Photo Quality Ink Jet Card	50	–	If a support sheet is packed with the Photo Quality Ink Jet Card, put it under the stack of cards.
Ink Jet Note Cards	50	–	If a support sheet is packed with the Ink Jet Note Cards, put it under the stack of cards.
Ink Jet Greeting Cards	50	–	If a support sheet is packed with the Ink Jet Greeting Cards, put it under the stack of cards.
Photo Quality Glossy Paper	100 (20)*	100 (20)*	Do not use a support sheet even if it is packed with the Photo Quality Glossy Paper. *You can load up to 20 sheets of A3 or larger size paper.
Photo Quality Glossy Film	30	30 (excluding A6)	If a support sheet is packed with the Photo Quality Glossy Film, put it under the stack of the glossy film.

Media type	Paper tray	Lower paper tray (optional)	Remarks
Ink Jet Tranparencies	150	150	
Photo Quality Self Adhesive Sheets	–	–	You can load only in the front and rear feed slots.
Ink Jet Back Light Film	–	–	You can load only in the front and rear feed slots.
Photo Paper 4 × 6 inches	50	–	Put a support sheet or piece of plain paper under the stack of Photo Paper.
Photo Paper	100	100	Put a support sheet or piece of plain paper under the stack of Photo Paper.
Panoramic Photo Paper	–	–	You can load only in the rear manual feed slot.
Plain paper	250	250	
Envelopes	10	–	Plain paper
Index cards	100	–	Plain paper
Post cards	100	–	Plain paper

Caution:
You can use only the A4 size cleaning sheet that is packed with some types of EPSON special media to clean this printer. Do not use A3 size cleaning sheets. For details see page 1-6, "About special media cleaning sheets."

Loading Paper in a Paper Tray

You can load single sheets up to Super A3/B size using the paper tray. Before you load special paper, see also Chapter 1, "Printing on Various Kinds of Paper."

Tips on using a paper tray

Follow the tips below to get the best performance when printing from the paper tray.

- ❑ Load paper in the paper tray before sending data to the printer. When the printer receives data from the computer, it feeds a single sheet and begins to print.
- ❑ If the printer runs out of paper during a print job, reload the paper tray, or if the same size and type of paper is loaded in the other paper tray and the paper size and media type levers are set correctly, the printer automatically feeds from the other tray.
- ❑ Press the Eject button if you need to eject a sheet of loaded paper.

Using the paper size and media type cards

The paper size and media type cards are provided to help you identify the kind of paper you have loaded in the paper tray. Find the paper size card that matches the size of the paper you have loaded (for example, A4) and insert it in the card slot above the paper size lever, on the left. Find the media type card that matches the type of media you have loaded (for example, plain paper) and insert it in the card slot above the media type lever, on the right.

You can store unused cards in the pocket behind the paper size card slot.

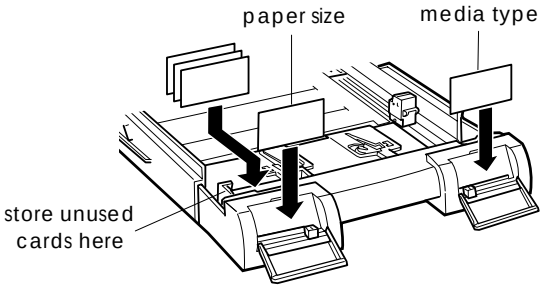

Loading paper in the standard paper tray

The following procedure describes how to load paper in the standard and optional lower paper trays; however see page 2-15 for extra information about loading paper in the lower paper tray.

You can load various types of media and EPSON special paper in the standard paper tray such as ink jet paper, transparencies, photo-quality glossy film or paper, envelopes, index cards, and adhesive sheets. For details on using such media, also see Chapter 1, “Printing on Various Kinds of Paper.”

1. Lift the paper tray slightly up and pull it out until you feel slight resistance.

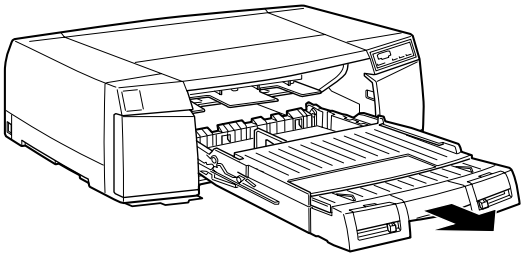

2. Open the paper tray cover.

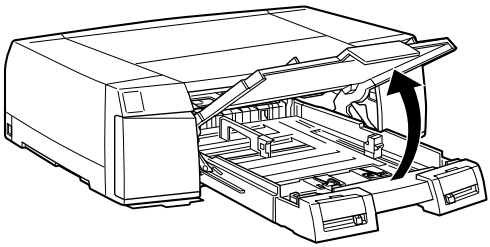

3. If you load Legal-size or larger paper, release the extension lock and pull out the paper tray extension completely.

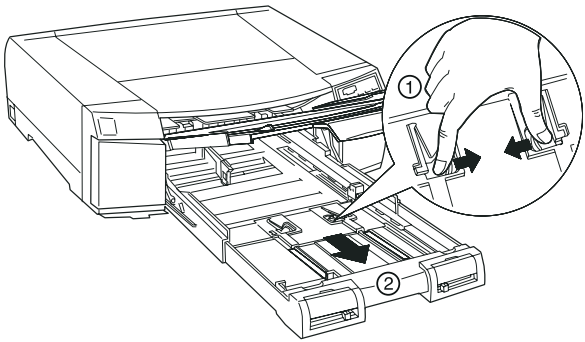

4. Slide both edge guides out as far as they will go.

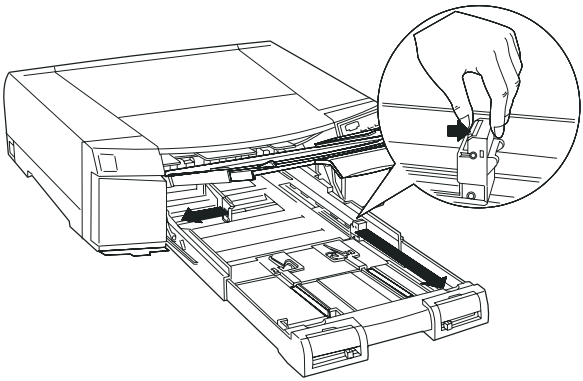

5. Fan a stack of paper; then tap it on a flat surface to even the edges.

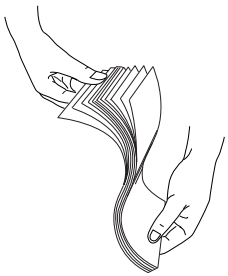

6. Load the stack of paper with the printable surface down and the right edge of the paper resting against the right side of the paper tray. Make sure the stack lies flat on the bottom of the tray.

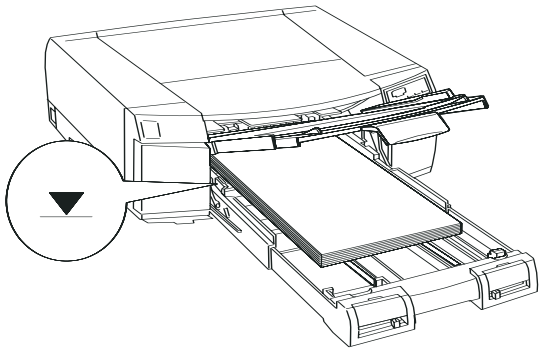

Note:

- ❑ *Load paper into the paper tray short edge first. Only a few kinds of paper can be loaded long edge first. See "Paper Path and Loadable Paper Size" on page 2-3 for details.*

- ❑ *If your paper is curled, flatten it before you load it. If it curls excessively and jams frequently, stop using it.*

- ❑ *The paper tray can hold up to 250 sheets of 17-lb. or 64g/m^2 plain paper. Do not load paper above the arrow mark on the inside surface of the right edge guide. For information on the loadable capacity of EPSON special paper, see page 2-5, "Paper Tray and Loading Capacity by Media Type."*

7. Slide the edge guides against the edges of the paper stack.

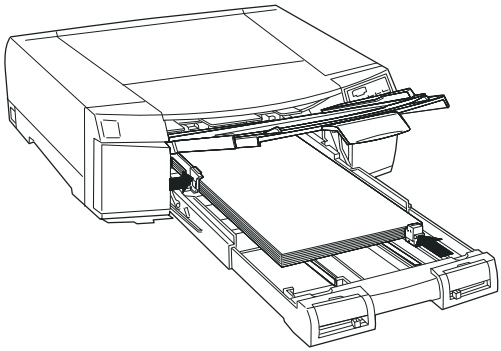

8. Close the paper tray cover.

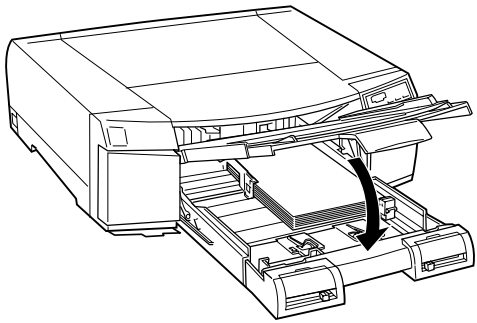

Note:
If you have extended the paper tray extension, first slide out the paper tray cover extension then close the paper tray cover.

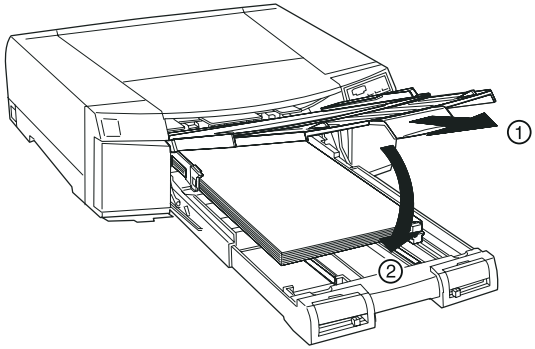

9. Firmly slide in the paper tray until it meets resistance.

10. Set the paper size and media type levers to match the paper you loaded.

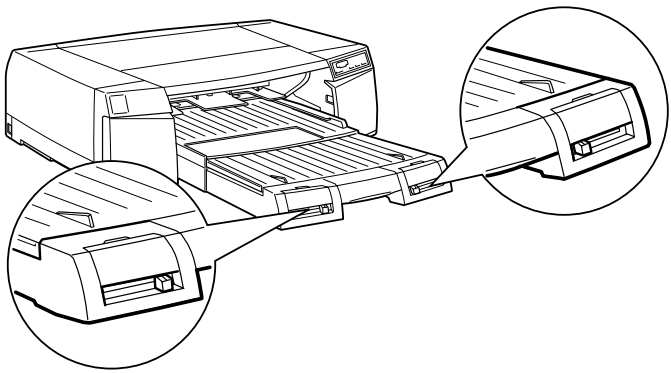

Note:

- *The paper size and media type lever settings you make in the paper tray can be overridden by the Paper Size and Media Type settings you make in your printer driver or application. The main purpose of this selection is to send a paper size or media type mismatch message to the printer driver in case the media loaded in the printer does not match the media you select in the software. You can turn off the notification function by selecting* Other *as the printer's paper size and media type settings.*

- *Select* Other *for unlisted paper sizes or media types.*

- *If ink smears on the paper, select* Thick Paper *as the media type setting.*

- *If you set the paper size or media type lever incorrectly, you may not get the print results you expect.*

- *The paper size and media type cards are provided to help you identify the kind of paper you have loaded in the paper tray. Find the paper size card that matches the size of paper you load and insert it in the card slot above the paper size lever, on the left. Find the media type card that matches the type of media you load and insert it in the card slot above the media type lever, on the right. You can store unused cards in the pocket behind the paper size card slot.*

Loading paper in the optional lower paper tray

To load paper in the 250 Sheet Lower Paper Tray that comes with the optional 250 Sheet Lower Paper Cassette, always pull the paper tray completely out from the paper cassette.

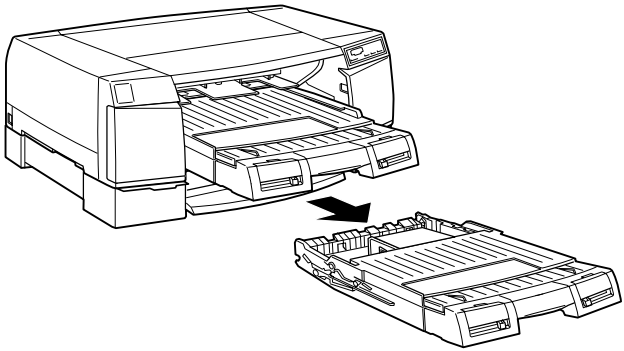

Then follow steps 2 to 10 (for the standard paper tray) on page 2-9 for instructions.

Note:

- ❑ *To pull out the paper tray, lift it up slightly and then pull it out.*
- ❑ *If you use paper larger than A4 size, pull out the paper tray extension and paper tray cover extension of the upper paper tray so that your printouts will be supported by the paper tray cover when they are ejected.*

Feeding paper from the lower paper tray

To print on the paper that is loaded in the lower paper tray, set the Paper Source setting in the printer driver to Paper Tray (Lower). The printer also feeds from the lower paper tray if the Paper Source setting in the printer driver is set to Auto Select and you select the paper size and media type settings in the printer driver that match the size and type of media loaded in the lower paper tray.

Note:
When the Paper Source setting in the printer driver is set to Auto Select *and the standard paper tray runs out of paper, the printer automatically switches and loads paper from the lower paper tray under any of the following conditions:*

- ❑ *The paper size and media type lever settings are the same for both paper trays.*
- ❑ *The paper size and media type levers are set to* Other *for the lower paper tray.*

Switching paper trays between the printer and the optional paper cassette

If you install the optional lower paper tray in the printer's standard paper tray slot, replace the optional paper tray cover with the standard paper tray cover, which has a right edge guide. Also, if you install the standard paper tray in the optional 250 Sheet Lower Paper Cassette, replace the paper tray cover with the optional paper tray cover.

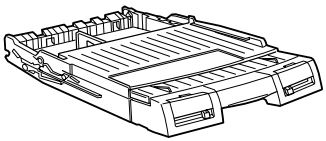

standard paper tray

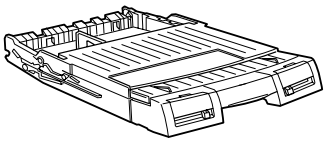

250 Sheet Paper Tray

Follow the instructions below to switch paper tray covers.

1. Remove the paper trays from the printer and optional paper cassette.

2. Open the paper tray cover.

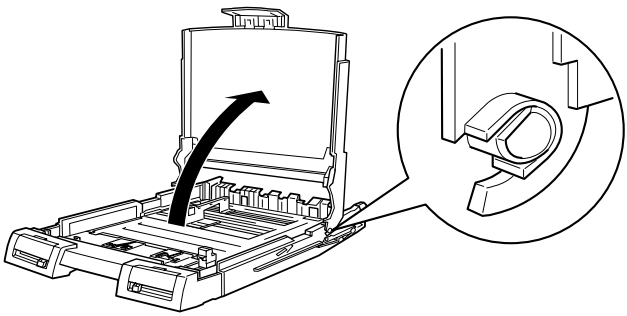

3. Lift the paper tray cover slightly backwards.

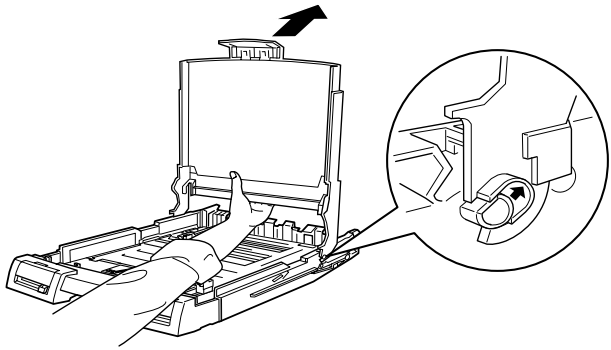

4. Lift the paper tray cover up and toward you so that the cover notches easily slide off the paper tray posts.

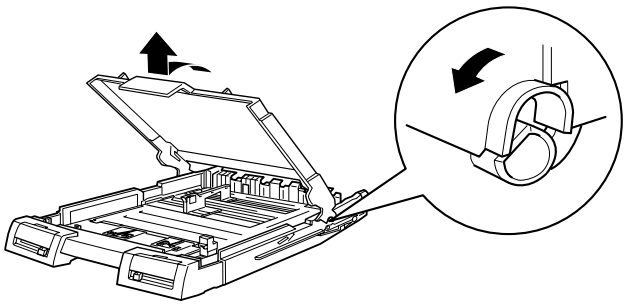

5. Lower the other paper tray cover so that the cover notches slide straight down and fit on the paper tray posts.

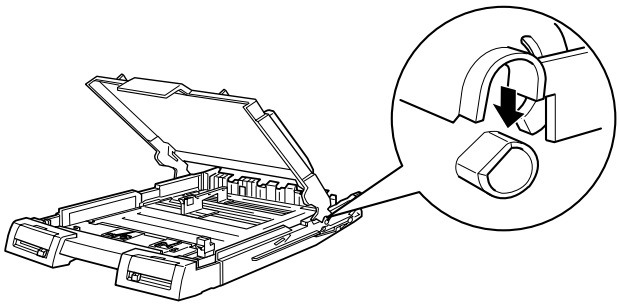

6. Move the paper tray cover to the upright position and make sure the cover notches click into place over the paper tray posts.

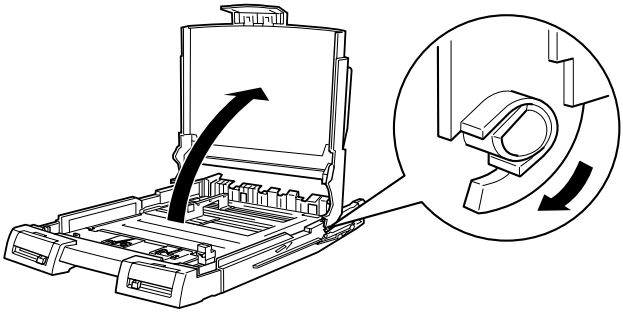

7. Close the paper tray cover.

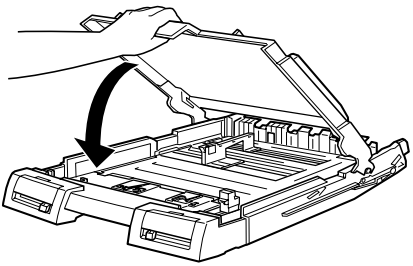

Loading Paper in the Manual Feed Slots

You can load single sheets of paper in the manual front or rear feed slot without removing the paper supply from the paper tray.

Loading in the front manual feed slot

Follow the tips below when loading paper in the front feed slot.

- ❑ You can load one sheet at a time in the front feed slot.
- ❑ Load paper printable side down.

The following procedure describes how to load paper in the front feed slot.

1. Make sure the printer is turned on.
2. If you are loading a sheet of paper that is longer than A4 size, extend the paper tray extension and paper tray cover extension.

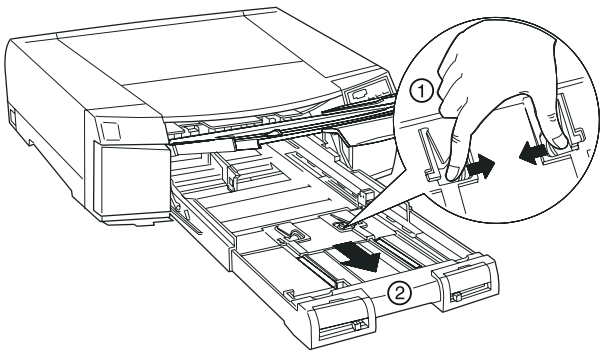

3. Align the right edge of the paper with the right edge guide and load the paper printable side down in the feed slot until it meets resistance.

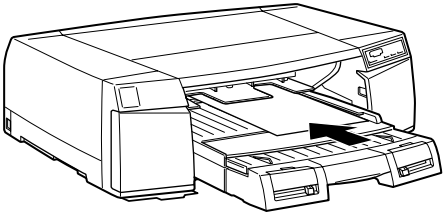

4. The printer automatically feeds the paper, and the printer starts printing when you send a print job from the computer.

When the printer finishes printing, it ejects the sheet. If the sheet does not eject completely, press the Eject button.

Loading in the rear manual feed slot

Follow the tips below when loading paper in the rear feed slot.

- ❑ You can load one sheet at a time.
- ❑ Load paper printable side up.

The following procedure describes how to load paper in the rear feed slot.

1. Make sure the printer is turned on.
2. If you are loading a sheet of paper longer than A4 size, extend the paper tray extension and paper tray cover extension.

3. Open the rear slot cover.

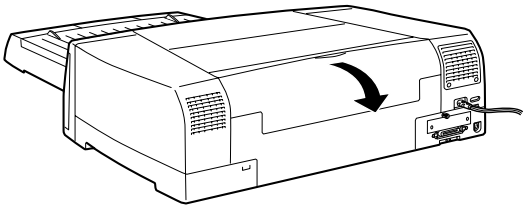

4. Slide the left edge guide to match the paper's width.

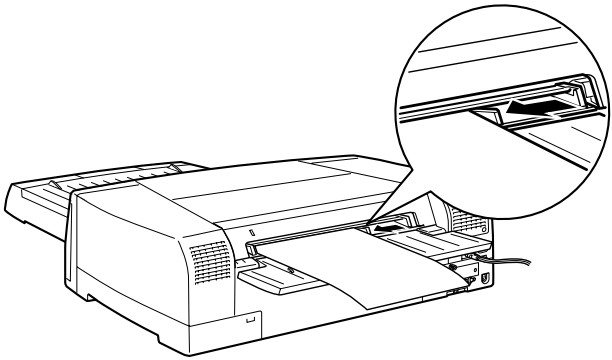

5. Align the right edge of the paper with the right edge guide, and load the paper printable side up in the rear feed slot until it meets resistance.

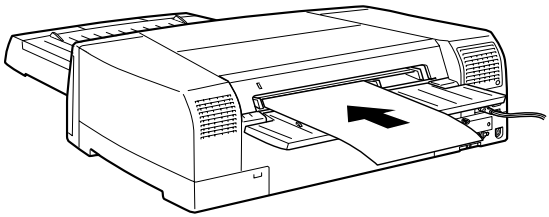

Note:
Load envelpes flap side down with the flap edge against the left edge guide. For C5 envelopes, load the flap edge (short edge) first with the flap side down.

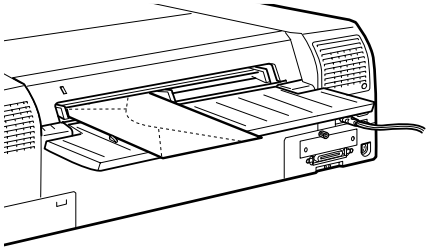

6. The printer feeds the sheet automatically, and the printer starts printing when you send a print job from the computer.

When the printer finishes printing, it ejects the sheet. If the sheet does not eject completely, press the Eject button.

Chapter 3

Using the Printer Software for Windows

The Printer Software 3-2

Accessing the Printer Software 3-3
- From Windows applications 3-3
- From Windows 95 or Windows NT 4.0 3-4
- From Windows 3.1 3-4

Using the Automatic Setting 3-5

Using the Predefined Settings 3-6

Customizing the Print Settings 3-8
- Saving your settings 3-9

Making the Media Type Setting 3-10

Modifying the Printout Method and Style 3-12
- Using the Paper menu 3-13
- Using the Layout menu (Windows 95 & NT 4.0 only) . . . 3-14

Checking Print Job & Printer Status 3-16
- Understanding the EPSON Spool Manager 3-16

Getting Information Through Online Help 3-19
- From Windows applications 3-19
- From Windows 95 3-20
- From Windows NT 4.0 3-20
- From Windows 3.1 3-20

The Printer Software

The printer software includes a printer driver and printer utilities. The printer driver lets you choose from a wide variety of settings to get the best results from your printer. The printer utilities help you check the printer and keep it in top condition.

The quickest and easiest way to start printing is to leave the Mode option set to Automatic on the printer driver's Main menu. This way you only need to check the Media Type and Ink settings, as described on page 3-5.

Basically, there are three levels of settings: the Automatic setting; the predefined settings, which give you more control over printer settings; and the custom settings, which you make to fit your individual needs. To work with predefined and custom settings, you need to select Advanced as the Mode option in the printer driver. These settings are described in detail starting on page 3-6.

The printer software also enables you to change output style, see page 3-12 for details.

To check the condition of the printer or perform a maintenance procedure, see Chapter 5, "Using EPSON Printer Utilities."

Accessing the Printer Software

As explained on the following pages, you can access the printer driver settings and printer utilities contained in your printer software directly from any Windows application, or from My Computer in Windows 95 and Windows NT 4.0, or Program Manager in Windows 3.1. The print settings made in many Windows applications override similar settings made in the printer driver, so in most cases you should access the printer software from your application to make sure that the settings are appropriate for the document you want to print.

Note:
Online help is available for details about the printer driver settings.

From Windows applications

How you should access the printer software varies depending on the application, application version, and Windows version you are using. Read the following to get a general idea of how to access the software.

From the File menu, choose Print or Print Setup. In the dialog box that appears click Printer, Setup, Properties, or Options. You may need to click a combination of these buttons.

The Main, Paper, and Layout menus contain the printer driver settings. The Utility menu contains the printer utilities, printer and option information and settings. Click a tab at the top of the menus to open the corresponding menu.

For information on the printer driver settings, see online help and page 3-5. See Chapter 5 for information on the printer utilities and printer and option information and settings.

From Windows 95 or Windows NT 4.0

Follow these steps to access the printer software from My Computer.

If you are using Windows 3.1, see the next section.

1. Double-click the My Computer icon.

2. Double-click the Printers folder.

3. For Windows 95, right-click the icon of your printer, and click Properties. The Properties window appears. Click a tab at the top of the Properties window to open the corresponding menu. For Windows NT 4.0, right-click the icon of your printer, and click Document Defaults.

4. The Main, Paper, and Layout menus contain the printer driver settings. The Utility menu contains the printer utilities and printer and option information and settings.

For information on the printer driver settings, see online help and page 3-5. See Chapter 5 for information on the printer utilities and printer and option information and settings.

From Windows 3.1

Follow these steps to access the printer software from Program Manager:

1. Open the Main program group and double-click the Control Panel icon.

2. Double-click the Printers icon.

3. Choose your printer from the Installed Printers list.

4. Choose Setup. You see the Main menu of the printer software window. The Main and Paper menus contain the printer driver settings. The Utility menu contains the printer utilities. Click a tab at the top of the menus to open the corresponding menu.

For information on the printer driver settings, see online help and the following sections. See Chapter 5 for information on the printer utilities and printer and option information and settings.

Using the Automatic Setting

When Automatic is selected on the Main menu, the printer driver takes care of all detailed settings according to the Media Type and Ink settings you make (see page 3-10 for details on making the Media Type setting). If you leave Mode set to Automatic, Media Type and Ink are the only settings you need to check yourself. Most Windows applications feature paper size and page layout settings which override similar settings on the Paper menu, but if your application does not, you need to make those settings on the Paper menu.

Note:
Depending on the media you choose in the Media Type list while Automatic is selected, a slide bar appears in the Mode box that lets you choose Quality *or* Speed. *Select* Quality *when print quality is more important than speed.*

Online help provides more information about the printer driver settings. See page 3-19 for instructions on using online help.

Using the Predefined Settings

The predefined settings are provided to help you optimize the print settings for a particular kind of printout, such as presentation documents or images taken by a video or digital camera. You will find the predefined settings in the list below the Advanced button on the Main menu.

To choose a predefined setting, click Advanced, then select the most appropriate setting from the list according to the type of document or image you will print.

When you choose a predefined setting, other settings such as Print Quality, Halftoning, and Color are set automatically. Changes are shown in the Current Settings display at the bottom of the Main menu. Before printing, be sure to verify the Media Type and Ink settings, as they may be affected by the predefined setting you select. See page 3-10 for more information on making the Media Type setting.

The printer driver provides the following predefined settings:

Advanced Photo	Good for printing scanned photos and digitally-captured images in high quality. Also helps prevent the misprinting of ink dots that may occur due to the movement of the printer head and paper.

Photo	Good for printing scanned photos
Text / Graph	Good for printing presentation documents such as graphs and charts
Photo Enhance (for Windows 3.1) or Photo Enhance 2 (for Windows 95)	Good for printing images captured using a video, digital camera, or scanner. EPSON PhotoEnhance and PhotoEnhance 2 automatically adjust the contrast, saturation, and brightness of the original image data to produce sharper, more vivid color printouts. PhotoEnhance does not affect your original image data. ***Note:*** *Printing with PhotoEnhance selected may increase print time depending on your computer system and the amount of data contained in your image.*
Text	Good for printing text-only documents
ICM	ICM means Image Color Matching. This feature automatically adjusts printout colors to match colors on your screen.

Note:
ICM is only available for Windows 95.

Customizing the Print Settings

Many users will never need to manually make their own print settings. However, if you need more control over the driver, want to make the most detailed settings available, or just want to experiment, click the Advanced button on the Main menu and then click the More Settings button. The More Settings dialog box appears:

Some settings are enabled or disabled depending on the Print Quality, Media Type, and Ink settings you make. To save time and effort, always customize your settings in this order: Print Quality, Media Type, Ink, and then make other settings. See the next section for details about making the Media Type setting.

After making your settings, click OK. Your settings will be applied and you will return to the Main menu. To return to the Main menu without applying your changes, click Cancel. For details on the settings, see online help.

Saving your settings

To save your custom settings, click Save Settings on the Main menu. The Custom Settings dialog box appears:

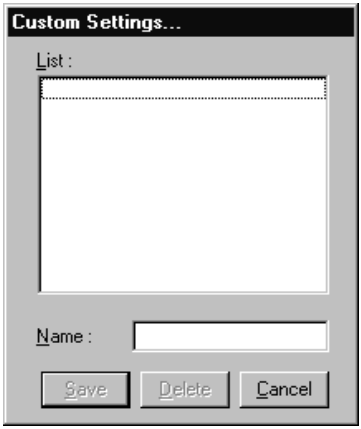

Type a unique name for your custom settings in the Name box, and click the Save button. Your settings will appear in the list under the Advanced button on the Main menu.

Note:

- ❑ *You cannot use a predefined setting name for your custom settings.*
- ❑ *To delete a custom setting, click* Save Settings *on the Main menu, select the setting in the Custom Settings dialog box and then click* Delete.
- ❑ *You cannot delete the predefined settings.*

If you change the Media Type or Ink setting when one of your customized settings is selected in the Advanced settings list on the Main menu, the setting selected in the list changes to Custom Settings. The customized setting that was previously selected is not affected by this change. To return to your customized setting, simply reselect it in the settings list.

Making the Media Type Setting

On the Main menu, select the Media Type setting that matches the paper you loaded in the printer. See the following to determine the Media Type setting (shown in bold) for your paper. First find your paper, then click the corresponding Media Type setting.

Note:
If the corresponding Media Type option for your paper is not shown in the Media Type list, change the Print Quality setting in the More Settings dialog box, select Automatic *as the Mode setting, or change the predefined setting in the Advanced settings list on the Main menu.*

Plain Paper

Plain paper
Envelopes

360 dpi Ink Jet Paper

EPSON 360 dpi Ink Jet Paper (A4)	S041059
	S041025
EPSON 360 dpi Ink Jet Paper (Letter)	S041060
	S041028
EPSON 360 dpi Ink Jet Paper (A3)	S041065
	S041046
EPSON 360 dpi Ink Jet Paper (Super A3/B)	S041066
	S041047

Photo Quality Ink Jet Paper

EPSON Photo Quality Ink Jet Paper (A4)	S041061 S041026
EPSON Photo Quality Ink Jet Paper (Letter)	S041062 S041029
EPSON Photo Quality Ink Jet Paper (Legal)	S041067 S041048
EPSON Photo Quality Ink Jet Paper (A3)	S041068 S041045
EPSON Photo Quality Ink Jet Paper (B)	S041070 S041044
EPSON Photo Quality Ink Jet Paper (Super A3/B)	S041069 S041043
EPSON Photo Quality Ink Jet Card (A6)	S041054
EPSON Photo Quality Ink Jet Card (5 × 8")	S041121
EPSON Photo Quality Ink Jet Card (8 × 10")	S041122
EPSON Ink Jet Note Cards A6 (with envelopes)	S041147
EPSON Ink Jet Note Cards 5 × 8" (with envelopes)	S041148
EPSON Ink Jet Greeting Cards 8 × 10" (with envelopes)	S041149
EPSON Photo Quality Self Adhesive Sheet (A4)	S041106

Ink Jet Transparencies

EPSON Ink Jet Transparencies (A4)	S041063
EPSON Ink Jet Transparencies (Letter)	S041064

Photo Quality Glossy Paper

EPSON Photo Quality Glossy Paper (A4)	S041126
EPSON Photo Quality Glossy Paper (Letter)	S041124
EPSON Photo Quality Glossy Paper (A3)	S041125
EPSON Photo Quality Glossy Paper (Super A3/B)	S041133
EPSON Photo Paper (4 × 6")	S041134
EPSON Photo Paper (A4)	S041140
EPSON Photo Paper (Letter)	S041141
EPSON Photo Paper (A3)	S041142
EPSON Photo Paper (Super A3/B)	S041143
EPSON Panoramic Photo Paper	S041145

Photo Quality Glossy Film

EPSON Photo Quality Glossy Film (A4)	S041071
EPSON Photo Quality Glossy Film (Letter)	S041072
EPSON Photo Quality Glossy Film (A6)	S041107
EPSON Photo Quality Glossy Film (A3)	S041073
EPSON Photo Quality Glossy Film (B)	S041075
EPSON Photo Quality Glossy Film (Super A3/B)	S041074

Ink Jet Back Light Film

EPSON Ink Jet Back Light Film (A3)	S041131

Note:
The availability of special media varies by country.

Modifying the Printout Method and Style

This section describes how to make various printout settings that affect the way your document is printed and the look of your printout.

Using the Paper menu

The Paper menu provides you with the Paper Source and Paper Size settings, as well as various other settings, such as number of copies and printable area. See your *Setup Guide* or online help for information about making the Paper Source and Paper Size settings.

Copies

Click in the Copies box or click the arrows next to the box to specify the number of copies you want. Enter any number from 1 to 99. You can also collate copies (print copies in sets) and print in reverse order.

Orientation

Select whether to print your document or image in Portrait (tall) or Landscape (wide) orientation. If you are using Windows 95 or Windows NT 4.0, you can rotate your document by 180 degrees. This rotates your document 180 degrees vertically, which allows you to print closer to the bottom edge. This is possible because the printer's minimum top margin is smaller than the minimum bottom margin.

Printable Area

Select Maximum to make your printout as large as possible on the paper. Select Centered to position your printout at equal distance from all edges.

Using the Layout menu (Windows 95 & NT 4.0 only)

The Layout menu provides you with three layout options for Windows 95 and two for Windows NT 4.0. Proportional Printing settings allow you to enlarge or reduce the size of an image or document, the Print Layout setting (Windows 95 only) allows you to print one, two, or four pages on a sheet of paper, and the WaterMark setting enables you to print a predefined or user defined watermark on your printed document.

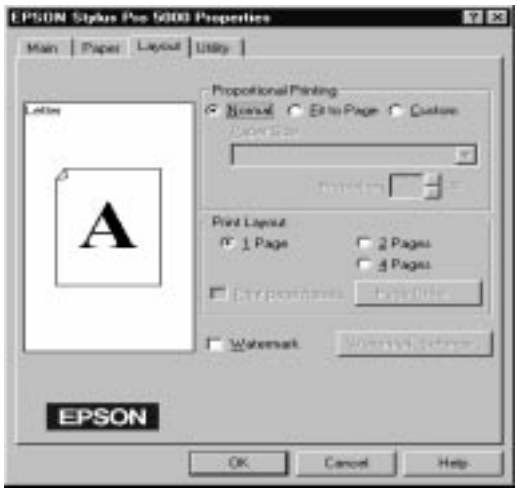

Proportional Printing

There are three options in the Proportional Printing box: Normal, Fit to Page, and Custom. The Fit to Page setting proportionally enlarges or reduces the size of the image to make it fit the paper size you select in the Paper Size list. The Custom setting allows you to manually define the percentage you want to enlarge or reduce an image. Click the arrows next to the Proportion box to select from 10% to 400%.

Print Layout (Windows 95 only)

Selecting the 2 Pages or 4 Pages radio button causes the printer to print 2 or 4 pages of your document on every sheet of paper. Click the Page Order button to view the Page Order dialog box, where you can select the layout of the pages you want to print.

You can also choose to print a frame around each page on the sheet of paper by clicking the Print page frames check box. The Print page frames feature is active if a check appears in the check box.

Watermark

Check the Watermark check box to activate the currently selected watermark and to enable the Watermark Settings button, which opens the Watermark Settings dialog box. In the Watermark Settings dialog box you can select from a list of predefined watermarks, or you can select a bitmap (.BMP) file as your own custom watermark. The Watermark Settings dialog box also allows you to make a variety of detailed watermark settings, for example you can select the size, color, and position of your watermark.

Checking Print Job & Printer Status

When a print job is sent to the printer from a Windows 95- or Windows 3.1-based application, the EPSON Spool Manager starts automatically. The Spool Manager for Windows 95 displays the Progress Meter, which shows the status of the current print job and the status of printer consumables such as ink (not available on certain systems). The Spool Manager for Windows 3.1 displays the Despooler, which shows the status of the current print job.

Understanding the EPSON Spool Manager

The EPSON Spool Manager is similar to Windows Print Manager and is available for Windows 95 and Windows 3.1. If the Spool Manager receives two or more print jobs at one time, it puts them in a line (with printers on a network this may be called a print queue) in the order received. When a print job reaches the top of the line, the EPSON Spool Manager sends the job to the printer.

For Windows 95

To access the Spool Manager from Windows 95, click the EPSON Stylus Pro 5000 button after it appears on the taskbar. You can see the status and information for the print jobs and also you can cancel, pause and resume, or restart selected print jobs from the Spool Manager for Windows 95.

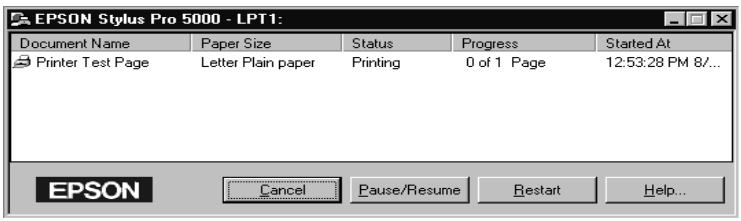

EPSON Progress Meter for Windows 95

When you send a print job to the printer, the EPSON Progress meter appears in the lower right portion of your computer screen. This meter shows the progress of the current print job and provides printer status information if the EPSON Status Monitor 2 utility is installed and bidirectional communication between the printer and computer is established. You can open the Printer Status window to obtain more detailed status information by clicking the Detail button.

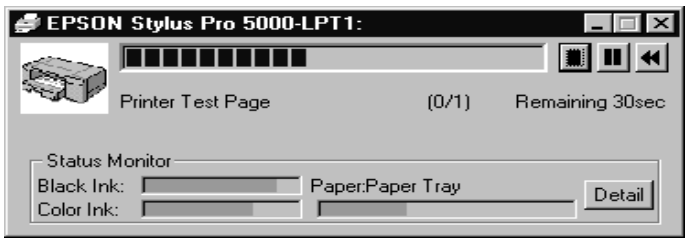

You can control printing from the EPSON Progress Meter using the stop, pause, and reprint buttons as explained below.

	Stop	Cancels printing
	Pause	Pauses printing until you press it again
	Reprint	Restarts printing from the current page, reprints the whole document, or holds the document for printing later

For Windows 3.1

To access the Spool Manager from Windows 3.1, double-click the EPSON Spool Manager icon after it appears at the bottom of your desktop, or double-click the Spool Manager icon in the EPSON program group. For more information, see online help.

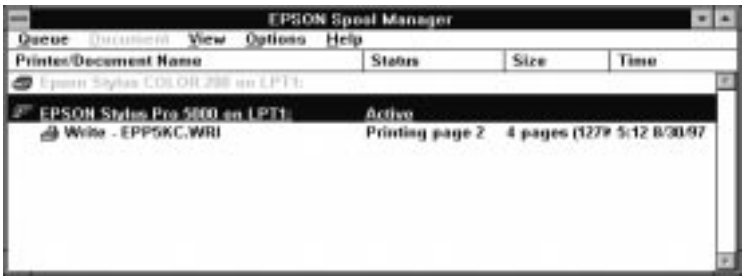

EPSON Despooler for Windows 3.1

When you send a print job to the printer, the EPSON Despooler dialog box appears in the lower right portion of your computer screen. This box shows the progress of the current print job and printer status information.

You can control printing from the Despooler dialog box using the stop, pause, and reprint buttons as explained below.

	Stop	Cancels printing
	Pause	Pauses printing until you press it again
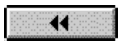	Reprint	Restarts printing from the current page, reprints the whole document, or holds the document for printing later

Getting Information Through Online Help

Your printer software has an extensive online help feature that includes detailed information and instructions about printer driver settings and the printer utilities. Online help will answer most of your questions about your printer software.

From Windows applications

To access online help from your application, open the File menu and choose Print or Print Setup. Then click Printer, Setup, Options, or Properties (you may need to click a combination of these buttons) depending on the software you are using. Click the Help button at the bottom of the Main, Paper, Layout, or Utility menu for help related to the items on that menu.

If you are running Windows 95 or NT 4.0, you can get specific help related to any item on a menu by right-clicking the item, then clicking the What's This? prompt.

From Windows 95

To access online help from Start, click the Start button, point to Programs and Epson, and then click EPSON Stylus Pro 5000 Help. You see the help contents window.

From Windows NT 4.0

To access online help from Start, click the Start button, point to Programs and EPSON Printers, and then click EPSON Stylus Pro 5000 Help. You see the help contents window.

From Windows 3.1

To access online help from Program Manager, open the EPSON program group and double-click the EPSON Stylus Pro 5000 Help icon. You see the help contents window.

Chapter 4

Using the Printer Software for Macintosh

The Printer Software 4-2

Using the Automatic Setting 4-3

Using the Predefined Settings 4-6

Customizing the Print Settings 4-9
- Making your settings 4-9
- Saving your settings 4-10
- Choosing your settings 4-11
- Modifying visual effects 4-11
- Controlling the printing quality 4-16

Changing the Paper Size 4-18

Defining a Custom Paper Size 4-20

Modifying the Printout Method and Style 4-22

Controlling Background Printing 4-25

The Printer Software

The printer software includes a printer driver and printer utilities. The printer driver lets you choose from a wide variety of settings to get the best results from your printer. The printer utilities help you check the printer and keep it in top condition.

The quickest and easiest way to start printing is to leave the Mode option set to Automatic in the Print dialog box. This way you only need to check the Media Type and Ink settings, as described on the next page.

Basically, there are three levels of settings: the Automatic setting; the predefined settings, which give you more control over printer settings; and the custom settings, which you make to fit your individual needs. To work with predefined and custom settings, you need to select Advanced as the Mode option. These settings are described in detail below.

To check the condition of the printer or perform a maintenance procedure, see Chapter 5, "Using EPSON Printer Utilities."

When you see a help icon or button on the dialog boxes, you can click it and obtain information and instructions about your printer software.

Using the Automatic Setting

When Automatic is selected as the Mode setting in the Print dialog box, the printer driver takes care of all detailed settings according to the Media Type and Ink settings you make (see page 4-4 for details on making the Media Type setting). Some users will never have to switch from the Automatic to the Advanced mode. However, if your application program does not give you enough control over the printout, you may want to switch to the Advanced mode to experiment with the predefined settings or make your own custom settings. See page 4-6 for information on making predefined settings, and page 4-9 for information on making custom settings.

To access the Print dialog box, click Print on the File menu of your application. The Print dialog box appears.

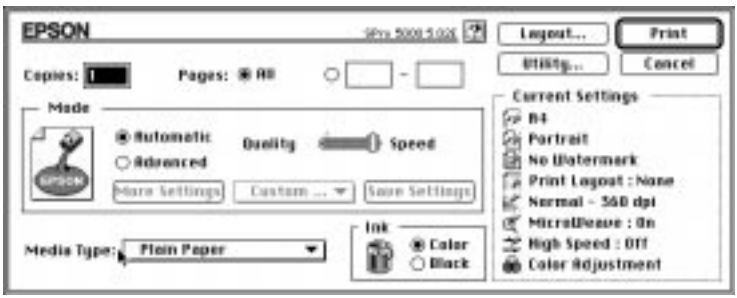

Note:
Depending on the media you choose as the Media Type setting while Automatic is selected, a slide bar appears in the Mode box that lets you choose Quality *or* Speed. *Select* Quality *when print quality is more important than speed.*

Before printing, be sure to verify the Media Type and Ink settings as described below because they also have an effect on the other settings. You may also need to check the Page Setup dialog box for other basic settings such as paper size. See page 4-18 for information on the Page Setup dialog box.

Media Type

Select the Media Type setting that matches the kind of paper you loaded in the printer. See below to determine which Media Type setting (shown in bold) best matches your paper.

Plain Paper

Plain paper
Envelopes

360 dpi Ink Jet Paper

EPSON 360 dpi Ink Jet Paper (A4)	S041059 S041025
EPSON 360 dpi Ink Jet Paper (Letter)	S041060 S041028
EPSON 360 dpi Ink Jet Paper (A3)	S041065 S041046
EPSON 360 dpi Ink Jet Paper (Super A3/B)	S041066 S041047

Photo Quality Ink Jet Paper

EPSON Photo Quality Ink Jet Paper (A4)	S041061 S041026
EPSON Photo Quality Ink Jet Paper (Letter)	S041062 S041029
EPSON Photo Quality Ink Jet Paper (Legal)	S041067 S041048
EPSON Photo Quality Ink Jet Paper (A3)	S041068 S041045
EPSON Photo Quality Ink Jet Paper (B)	S041070 S041044
EPSON Photo Quality Ink Jet Paper (Super A3/B)	S041069 S041043
EPSON Photo Quality Ink Jet Card (A6)	S041054
EPSON Photo Quality Ink Jet Card (5 × 8")	S041121
EPSON Photo Quality Ink Jet Card (8 × 10")	S041122

EPSON Ink Jet Note Card (A6)	S041147
EPSON Ink Jet Note Card (5 × 8")	S041148
EPSON Ink Jet Greeting Card (8 × 10")	S041149
EPSON Photo Quality Self Adhesive Sheet (A4)	S041106

Ink Jet Transparencies

EPSON Ink Jet Transparencies (A4)	S041063
EPSON Ink Jet Transparencies (Letter)	S041064

Photo Quality Glossy Paper

EPSON Photo Quality Glossy Paper (A4)	S041126
EPSON Photo Quality Glossy Paper (Letter)	S041124
EPSON Photo Quality Glossy Paper (A3)	S041125
EPSON Photo Quality Glossy Paper (Super A3/B)	S041133
EPSON Photo Paper (4 × 6")	S041134
EPSON Photo Paper (A4)	S041140
EPSON Photo Paper (Letter)	S041141
EPSON Photo Paper (A3)	S041142
EPSON Photo Paper (Super A3/B)	S041143
EPSON Panoramic Photo Paper	S041145

Photo Quality Glossy Film

EPSON Photo Quality Glossy Film (A4)	S041071
EPSON Photo Quality Glossy Film (Letter)	S041072
EPSON Photo Quality Glossy Film (A6)	S041107
EPSON Photo Quality Glossy Film (A3)	S041073
EPSON Photo Quality Glossy Film (B)	S041075
EPSON Photo Quality Glossy Film (Super A3/B)	S041074

Ink Jet Back Light Film

EPSON Ink Jet Back Light Film (A3) S041131

Note:
The availability of special media varies by country.

Ink

If your document includes color, select Color. If you are printing black text, a draft, or if you want colors to print as varying shades of gray, choose Black.

Using the Predefined Settings

The predefined settings are provided to help you optimize the print settings for a particular kind of printout such as presentation documents or images taken by a video or digital camera.

The predefined settings appear in a list located between the More Settings and Save Settings buttons in the Print dialog box. This list is enabled when you click the Advanced button.

To select a predefined setting, click the Advanced button, then click in the list and select a setting according to the type of document or image you want to print.

When you choose a predefined setting, other settings such as Print Quality, Halftoning, and Color are set automatically. Changes are shown in the Current Settings display on the right side of the Print dialog box. Before printing, be sure to verify the Media Type and Ink settings, as they may be affected by the predefined setting you select. See the previous section for more information on the Media Type and Ink settings.

The printer driver provides the following predefined settings:

Advanced Photo

This setting provides you with excellent reproduction of scanned images or digitally captured images. Advanced Photo slows down printing, but helps to avoid any shifting of placement of ink dots in your printouts, which may occur due to the movement of the print head and paper feeding. You will get the best results if you use this setting in combination with high quality paper.

Note:
Selecting Advanced Photo *automatically sets the Ink option to Color. Changing the Ink setting after* Advanced Photo *is selected returns the settings list to* Custom Settings*, so always make your ink setting before you select this option.*

Photo

This setting provides you with excellent reproduction of scanned images or digitally captured images.

Note:
Changing the Ink setting after Photo *is selected returns the settings list to* Custom Settings*, so always make your Ink setting before you select this option.*

Text/Graph

This setting is best for graphics-intensive documents such as charts and graphs for presentations. It intensifies the colors but lightens the midtones and highlights of an image.

Note:
Changing the Ink setting after Text/Graph *is selected returns the settings list to* Custom Settings*, so always make your Ink setting before you select this option.*

PhotoEnhance 2

This setting is best for printing images captured using a video, digital camera, or scanner. EPSON PhotoEnhance 2 feature produces sharper images and more vivid colors by automatically adjusting the contrast, saturation, and brightness of the original image data.

Note:

- *Selecting* PhotoEnhance 2 *automatically sets the Ink option to* Color. *Changing the Ink setting after* PhotoEnhance 2 *is selected returns the settings list to* Custom Settings.

- *Printing with* PhotoEnhance 2 *selected may take longer depending on your computer system and the amount of data contained in your image.*

ColorSync

This setting automatically adjusts printout colors to match the colors on your screen.

Note:
Selecting ColorSync *automatically sets the Ink option to* Color. *Changing the Ink setting after* ColorSync *is selected returns the settings list to* Custom Settings.

Text

This setting is best for printing text-only documents. It provides you with faster printing than the Text/Graph setting with only a slight decrease in printing quality. This setting automatically changes the Media Type setting to Plain Paper.

Note:
Changing the Ink setting after Text *is selected returns the setting list to* Custom Settings, *so always make your Ink setting before you select this option.*

Customizing the Print Settings

Some users will never need to manually make their own print settings. However, if you need more control over the driver, want to make the most detailed settings available, or just want to experiment, customize your print settings as described below.

Making your settings

1. Click the Advanced button in the Print dialog box.

2. Click the More Settings button. The More Settings dialog box appears. The settings in the More Settings dialog box allow you to modify visual effects and control print quality. These settings are explained in detail later in this chapter.

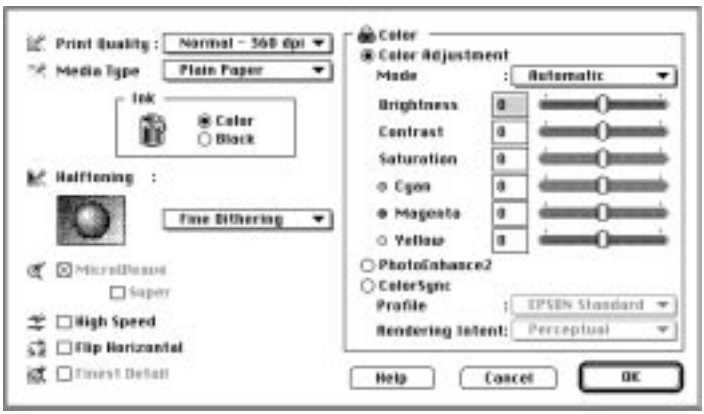

Note:
The Print Quality, Media Type, and Ink settings affect the availability of other options, so always make your settings in this order: Print Quality, Media Type, Ink, and then other settings.

3. After making your settings, click OK. Your settings will be applied and you will return to the Print dialog box. To return to the Print dialog box without applying your settings, click Cancel.

Saving your settings

To save your custom settings as a group, follow these steps:

1. Click Save Settings in the Print dialog box. The Custom Settings dialog box appears.

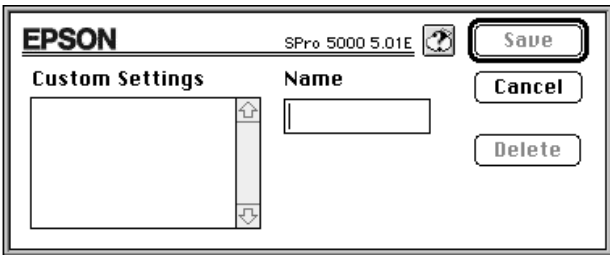

2. Type a unique name (up to 16 characters) for your custom settings in the Name box.

3. Click Save.

You can save up to 10 groups of custom settings. You can select your saved group of settings from the settings list in the Print dialog box.

Note:

- ❑ *You cannot use a predefined setting name for your custom settings.*

- ❑ *To delete a custom setting, click* Save Settings *in the Print dialog box to open the Custom Settings dialog box, then select the setting and click* Delete.

- ❑ *You cannot delete the predefined settings.*

Choosing your settings

To choose your settings, click Advanced in the Print dialog box, then click in the settings list beside the More Settings button and select your setting.

If you change the Media Type or Ink option when one of your customized settings is selected in the settings list, the selection shown in the list returns to Custom Settings. The customized setting that was previously selected is not affected by this change. To return to your customized setting, simply reselect it in the list.

Modifying visual effects

To make detailed modifications to the printed appearance of your image, use the Color and Halftoning settings in the More Settings dialog box. You may need to experiment with different settings to get the results you want.

Note:
When Color *is selected as the Ink setting, all Color settings are available. When* Black *is selected, only Contrast and Brightness are available. See page 4-6 for information on the Ink settings.*

Color Adjustment

The Color Adjustment settings provide you with a level of control over printed colors that you cannot find in many applications.

Mode

There are four color adjustment modes, as follows:

Automatic

Analyzes the print data and optimizes color correction for the type of data sent to the printer.

Photo-realistic

Provides output that closely matches the original data. Use this setting for color photographs.

Vivid

Intensifies the colors and lightens the midtones and highlights of an image. Use this setting for presentation graphics, such as charts and graphs.

No Color Adjustment

The printer driver does not enhance the color. Choose this option only when making a ColorSync profile for this printer. When printing normally, choose one of the other modes.

Slide bars

For the settings below, drag the slide bar to the right or left with your mouse or type a value in the box next to the slide bar to adjust a setting. The range varies from -25% to +25%.

Brightness

Changes the overall lightness or darkness of an image.

Contrast

Magnifies or minimizes the difference between the bright and dark parts of an image.

Saturation

Modifies the vividness of color. Lower saturation produces colors that are more muted than those produced with higher saturation.

Cyan, Magenta, Yellow

Adjusts the amount of each of the three basic colors used for printing.

PhotoEnhance 2

Select this option when printing images taken with a video camera, digital camera, or scanner. EPSON PhotoEnhance 2 automatically adjusts the contrast, saturation, and brightness of the original image data to produce sharper, more vivid color printouts. PhotoEnhance 2 does not affect your original image data.

When PhotoEnhance 2 is selected, other settings are dimmed, meaning you cannot change those settings.

Note:

- ❑ *PhotoEnhance 2 is only available when* Color *is selected as the Ink option.*
- ❑ *Printing with PhotoEnhance 2 selected may take longer depending on your computer system and on the amount of data contained in your image.*

ColorSync

Select ColorSync when matching printed colors with the colors on your screen is important. It automatically adjusts the color range to print colors the way they appear on your screen. There are two settings, Profile and Rendering Intent. See below for details.

To use this feature, make sure you set the system profile for your monitor. To set your monitor profile, access the ColorSync System Profile utility through the Control Panel and click the Set Profile button. Select your monitor from the list of monitors that appears, and then click Select. Close the dialog box.

Note:
ColorSync is available only when Color *is selected as the Ink option.*

Profile

Matches the colors in your output with the colors displayed on your monitor. This software provides one profile, EPSON Standard, which is custom-designed to work with your printer. When this option is selected, the printer software uses the profile provided by EPSON.

Some companies may provide other profiles with their products. If installed, these profiles will appear in the Profile list.

Rendering Intent

Transfers the color information using the profile you have chosen from the Profile list.

Perceptual

The best option for reproducing photographs and printouts that are not suited to the other options.

Saturation

The best option for reproducing vivid images. Use this setting for presentation graphics, such as charts and graphics.

Colorimetric

The best option when precise matching of colors is most important, for example, when printing a company logo. Keep in mind that Colorimetric, or any other color matching method, may not always reproduce colors perfectly due to differences in the way scanners, printers, and other devices process color data.

Halftoning

This setting lets you select one of three options: No Halftoning, Error Diffusion, or Fine Dithering.

- Select No Halftoning when printing text only. Although this setting provides faster printing, it should never be used with color.
- Select Error Diffusion when printing photographic images to make edges and colors softer. Error diffusion blends every colored dot in your image with the surrounding colored dots.
- Dithering arranges dots in orderly patterns and is best suited for printing charts, graphs, and other images that require precise, solid areas of bright colors. Select Fine Dithering for images with significant detail but limited shading.

Flip Horizontal

This feature flips the image 180° along its vertical axis. Printed images and text appear backwards.

Controlling the printing quality

Use the following controls in the More Settings dialog box to adjust the quality of the output. Some settings in this dialog box may be determined by Print Quality and Media Type settings.

Print Quality

The available Print Quality settings are:

SuperFine - 1440 dpi

Gives you the highest quality output at high resolution. This mode is best for your most important images, so be sure to use this setting only with high quality paper.

Fine - 720 dpi

Prints at 720 dpi giving you very high quality printouts. Select this setting when you use Plain Paper, EPSON Photo Quality Ink Jet Paper, or EPSON Photo Quality Glossy Paper as your Media Type setting.

Normal - 360 dpi

Prints at 360 dpi giving you very good quality printouts and higher print speed. Select this setting when you use Plain Paper, EPSON 360 dpi Ink Jet Paper, or EPSON Ink Jet Transparencies as your Media Type setting.

Note:
The Print Quality settings limit the availability of Media Type settings. Before selecting the Media Type, make the Print Quality setting. See page 4-4 for details on the Media Type settings.

MicroWeave

MicroWeave allows your printer to generate superior output because graphics data is re-ordered and printed in finer increments. This technology reduces the possibility of banding, the light horizontal lines that can mar an image.

The Super (Microweave) feature is enabled when the Ink setting is set to Color, Print Quality is set to SuperFine - 1440 dpi, and Media Type is set to Photo Quality Ink Jet Paper, Photo Quality Glossy Paper, or Photo Quality Glossy Film. You may want to select Super if your printout still has banding problems even with MicroWeave turned on. However, the printing time is longer when Super is selected.

High Speed

This setting activates bidirectional printing, which reduces the time it takes to print an image. Keep in mind that High Speed should be switched off for highest quality printing.

Note:
If printed vertical lines appear misaligned when High Speed is selected, you may need to align the print head. For details, see *"Aligning the Print Head" on page 8-41.*

Finest Detail

If you select Fine - 720 dpi as the Print Quality setting, you can turn on Finest Detail to print text and line art with very sharp edges. Be aware that it may take considerably longer to print using this feature and it will increase your Macintosh memory requirements. Additionally, you may not be able to print some larger images, and some patterns may not print correctly. If you experience problems printing with Finest Detail on, turn it off or add more memory.

Changing the Paper Size

To change the paper size, choose Page Setup from the File menu of your application. The following dialog box appears:

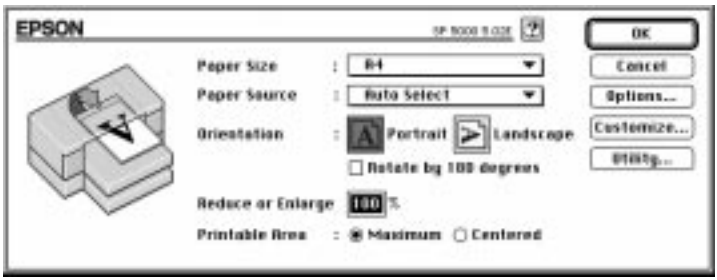

Paper Size

You can select any of the following predefined paper sizes. If you do not see your paper size in this list, see page 4-20 for details on defining a custom paper size.

Super A3/B	Ledger	Envelope C6
A3	Letter	Index card 5 × 8 in
B4	Letter (Landscape)	Index card 8 × 10 in
A4	Executive	EPSON Photo Paper 4 × 6 in
A4 (Landscape)	Legal	Panoramic 210 × 594 mm
B5	Half Letter	
B5 (Landscape)	Envelope #10	
A5 Index card	Envelope DL	
A6 Index card	Envelope C5	

Note:

- ❑ *The paper sizes you can load vary depending on the paper source that you use, see "Paper Path and Loadable Paper Size" on page 2-3 for details.*

- ❑ *Always load envelopes short edge first. Load envelopes flap edge to the left with the flap side up when loading in the paper tray. Load envelopes flap edge to the left with the flap side down when loading in the rear manual feed slot. For C5 envelopes, load the flap edge (short edge) first with the flap side up (printable surface down) in the paper tray, or load C5 envelopes flap edge first with the flap side down (printable surface up) in the rear manual feed slot.*

Paper Source

Your printer has a paper tray as well as front and rear manual feed slots. If you purchase and install the optional 250 Sheet Lower Paper Cassette, the Paper Tray (Lower) option is also available. Select the appropriate paper source, or select Auto Select to cause the printer driver to automatically select the correct paper source according to the Paper Size and Media Type settings.

Auto Select
Paper Tray
Paper Tray (Lower)*
Manual Feed

*Available only when the optional Lower Paper Cassette is installed.

Orientation

Use this setting to specify the direction of printing on the page, Portrait or Landscape.

Rotate by 180 degrees

Select this setting to rotate your document 180 degrees, which allows you to print closer to the bottom edge. This is possible because the printer's minimum top margin is smaller than the minimum bottom margin.

Reduce or Enlarge

Use this setting to reduce or enlarge the size of your image. The range is from 25% to 400%, but may vary depending on the application and paper size you use.

Printable Area

Select Maximum to make your printout as large as possible on the paper. Select Centered to position your printout at equal distances from the top and bottom edges and from the right and left edges.

Defining a Custom Paper Size

If your paper size is not included in the paper size list in the Page Setup dialog box, follow the steps below to define a custom paper size.

1. In the Page Setup dialog box, click Customize. The following dialog box appears:

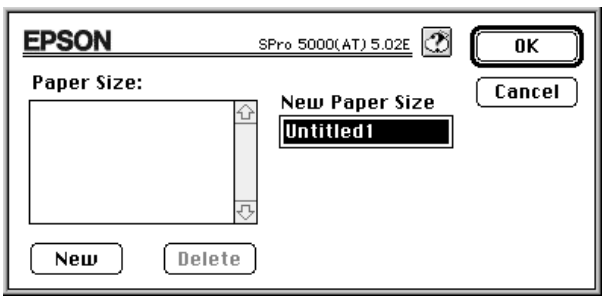

2. To define a new paper size, click New. The dialog box updates to allow you to enter a name for the new size.

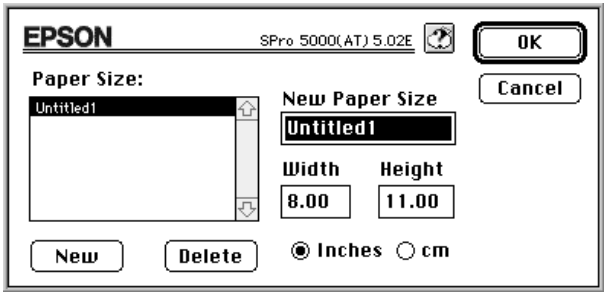

3. Type the paper size name in the New Paper Size box.

4. Specify the unit of measurement as either inches or cm.

5. Type in the width and the height.

6. Click OK. You return to the Page Setup dialog box.

   You can define up to eight paper sizes. The paper size names you create will appear in the Paper Size menu in the Page Setup dialog box.

To delete a custom paper size, click Customize in the Page Setup dialog box, select the custom paper size from the list in the Custom Paper dialog box, and click Delete.

Modifying the Printout Method and Style

To modify the printout method and style, click Print on the File menu of your application and click Layout in the Print dialog box.

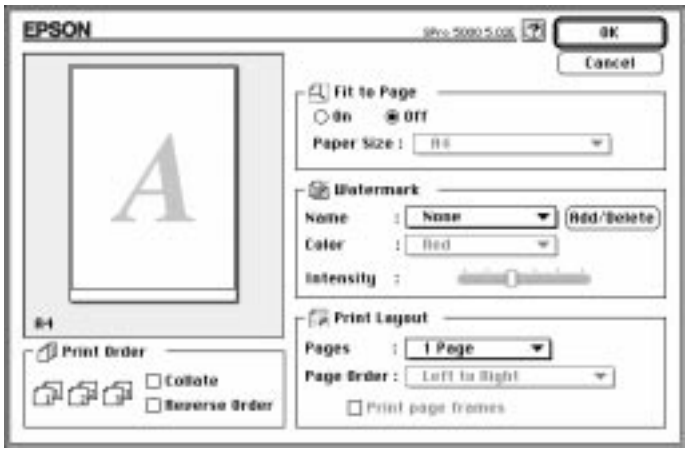

There are four settings in the Layout dialog box: Fit to Page, Watermark, Print Layout, and Print Order. These settings are described below.

Fit to Page

Selecting this setting proportionally enlarges or reduces the size of the image to make it fit the paper size you selected in the Paper Size list. To use this function, select On and select the paper size you loaded in the printer from the list.

Watermark

Selecting this function enables you to print a watermark in the background of your printed documents or images. Select the watermark you want to print from the Watermark list; then select its position, size, color, and intensity. The position and size of the water mark can be changed by dragging the watermark with your mouse in the preview window on the left side of the dialog box. When the mouse pointer is in the shape of a hand, you can move the watermark, and when it is in the shape of a finger, you can resize the water mark. You can also add (or delete) PICT files as your custom watermarks to the Watermark list. Follow the steps below to add your custom wartermarks:

1. Open the Layout dialog box and click Add/Delete.

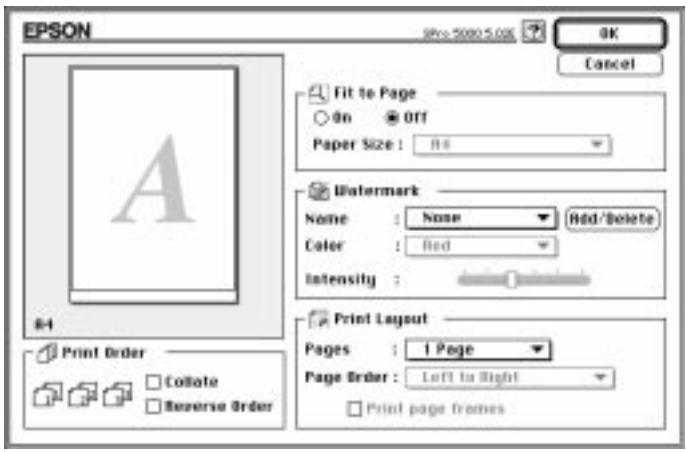

2. Click Add

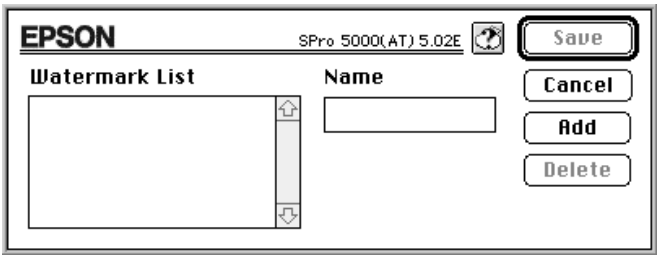

3. Select the image file you want to add and click Open.

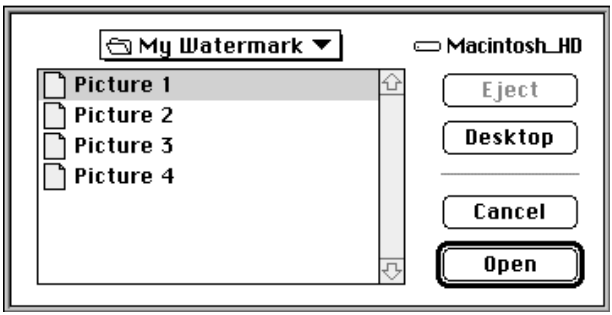

4. Name the image and click Save.

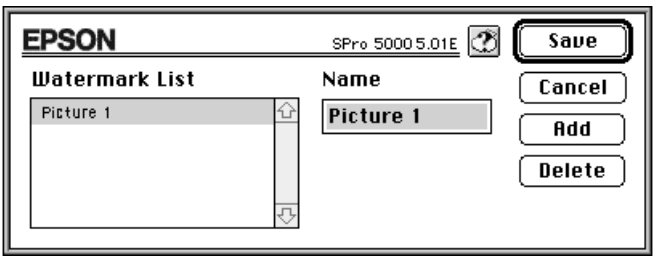

Print Layout

You can print two or four pages on a sheet of paper by selecting 2 Pages or 4 Pages in the Print Layout box. You can also choose to print a frame around each page on the sheet of paper.

Print Order

You can determine how you want to print multiple copies of your document: collated (printed a set at a time) or in reverse order.

Controlling Background Printing

After you send a print job to the printer, you can use the EPSON Monitor3 to check on what print jobs are queued for printing. You can cancel any print job in the queue. This utility also shows the status of the job currently being printed.

Before using EPSON Monitor3, you must first turn on Background Printing in the Chooser.

After starting a printing operation, select Epson Monitor3 from the Application menu at the right end of the menu bar. This opens a dialog box similar to the following:

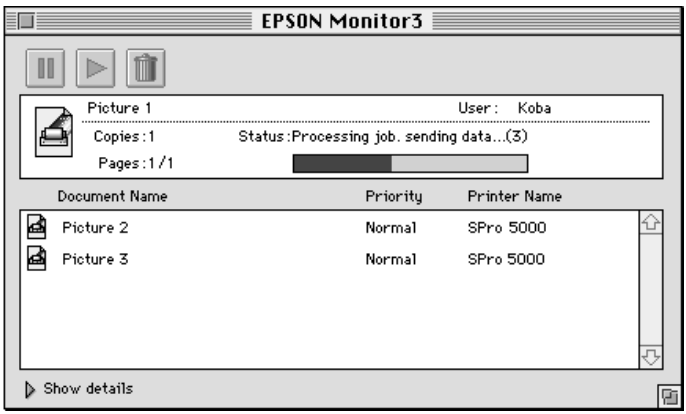

Note:
You can open EPSON Monitor3 by double-clicking the EPSON Monitor3 *icon in the Extensions folder.*

To stop printing, click the document, and click on the top of the dialog box.

To restart printing, click the document, and click on the top of the dialog box.

To cancel a print job, click the document, and click on the top of the dialog box.

To prioritize print jobs in a print queue, follows the steps below.

1. Click the Show details arrow on the bottom of the dialog box. You will see an extended dialog box similar to the one below.

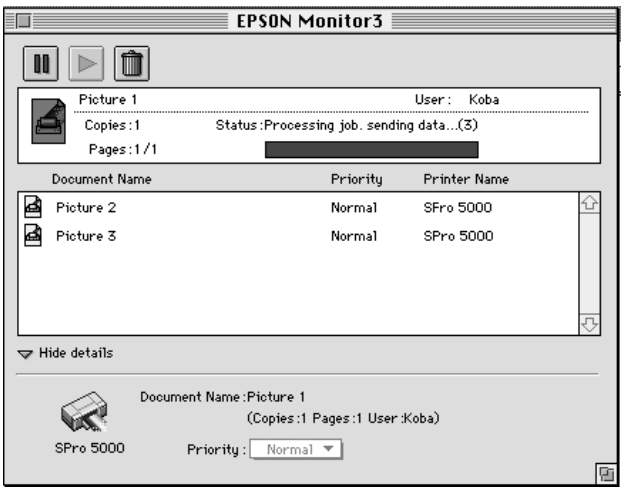

2. Click a document name in the document name box to change its priority.

3. Select Urgent, Normal, or Hold from the Priority list.

Chapter 5

Using EPSON Printer Utilities

Introducing the EPSON Printer Utilities 5-2
- EPSON Status Monitor 2 for Windows 95 5-3
- EPSON StatusMonitor for Macintosh 5-4
- Nozzle Check 5-4
- Head Cleaning 5-4
- Print Head Alignment 5-4
- Printer and Option Information (Windows only) 5-5
- Speed & Progress (Windows 95) 5-7
- Configuration (Macintosh) 5-9

Using the EPSON Status Monitor 2 Utility 5-10
- Opening EPSON Status Monitor 2 5-10
- Checking the Printer Status 5-10
- Printer Status window 5-16
- Setting Monitoring Preferences 5-20
- Using the background monitoring icon 5-22

Using the EPSON StatusMonitor (Macintosh) 5-23

Introducing the EPSON Printer Utilities

EPSON printer utilities allow you to do some printer maintenance from your screen. For Windows 95 and Macintosh, utilities to check the current printer status are also available. To access the utilities for Windows, click the Utility tab in the printer software window and the menu below appears. Then click the button for the utility you want to use. The utilities are explained briefly below.

Note:

- *The EPSON Status Monitor 2 utility and the Speed & Progress features are available only for Windows 95. See page 5-7 for more information about the Speed & Progress settings.*

- *The letter in parentheses after the utility name indicates the shortcut key for that utility. On your keyboard, press the* Alt *key and the letter to open that utility.*

- *While printing is in progress, pressing any of the utility buttons, except the EPSON Status Monitor button, may mar your printouts.*

For Macintosh users, click Utility in the Print dialog box and you will see a dialog box similar to the one below.

EPSON Status Monitor 2 for Windows 95

The Status Monitor 2 utility helps you keep track of the printer, shows how much ink and paper are remaining, and alerts you if it detects a printer error. To open the Status Monitor, click the EPSON Status Monitor 2 button on the Utility menu before printing. If the Status Monitor is not installed. See Chapter 2 in your *Setup Guide* for installation instructions.

The Status Monitor 2 utility that comes with your printer is available only when the printer is connected directly to the host computer via parallel port LPT1, and only when your system, is configured to support bi-directional communication. You can use the Status Monitor 2 utility that comes with the optional EPSON Ethernet Interface Card (must be installed) when connecting over a network.

See page 5-10 for more details about EPSON Status Monitor 2.

EPSON StatusMonitor for Macintosh

The StatusMonitor utility helps you keep track of the printer, shows you how much ink and paper are remaining, and alerts you if it detects a printer error.

You can use this utility to check the paper path, paper size, paper type, and you can also check how much ink is remaining before printing. See page 5-23 for more details about the EPSON StatusMonitor for Macintosh.

Nozzle Check

Check the nozzles if you notice a decline in print quality, and if the nozzle check indicates the print head needs cleaning, you can access the Head Cleaning utility directly from the Nozzle Check utility. Check the nozzles again after cleaning to confirm that the print head nozzles have been cleaned. See page 8-37 for more information.

Head Cleaning

You may need to clean the print head if you notice a decline in print quality. Before and after print head cleaning, use the Nozzle Check utility to check whether the print head needs to be cleaned (again if necessary). You can access the Nozzle Check utility directly from the Head Cleaning utility. See “Cleaning the Print Head” on page 8-37 for more information.

Print Head Alignment

If you notice a misalignment of vertical lines, use this utility to align the print head. See “Aligning the Print Head” on page 8-41 for more information.

Printer and Option Information (Windows only)

This utility allows the printer driver to confirm printer configuration information, such as whether an optional paper cassette or extra memory module is installed. It also provides specific information regarding certain characteristics of the printer such as Printer ID (Windows 95 and Windows NT 4.0 only).

The information displayed in the Printer and Option Information dialog box and the ability to automatically update that information varies depending on your system setup and whether you use the EPSON Ethernet card when connecting over a network. Under certain circumstances, you may need to manually input some information. If a message appears in the Current Settings window prompting you to enter settings, or if you change the printer's configuration, follow the steps below to manually make the necessary settings:

1. Click the Settings Sheet button in the Printer and Option Information dialog box to print out information about your printer and options. This requires A4 or letter size paper. You will see a printout similar to the one below.

```
Printer ID
 50- 50- 50- 50- 50- 50

SIMM
  32MB
```

2. Make sure the settings in the utility match the information on the printed Settings Sheet. If they do not match, correct the settings on screen to match the information on the settings sheet.

3. Click OK to exit this menu and save your settings.

Speed & Progress (Windows 95)

Follow the instructions below to open the Speed & Progress dialog box, where you can make certain print speed settings to your system.

To open the Speed & Progress dialog box, follow the steps below.

1. Double-click the My Computer icon.
2. Double click the Printers folder.
3. Right-click the icon of your printer, and click Properties. The Properties window appears.
4. Click the Utility tab at the top of the Properties window.
5. Click the Speed & Progress button.

High Speed Copies

Select this setting to turn on high-speed printing for multiple copies. This speeds up printing by using your hard disk space as a cache when printing multiple copies of your document.

Show Progress Meter

Select this setting to view the Progress Meter every time you print.

EPSON Printer Port

Select this setting to use the EPSON printer port driver instead of the Windows default printer port driver. The EPSON printer port is optimized for EPSON printers, so it speeds up the data transfer rate to EPSON printers.

DMA Transfer

A message may appear below the EPSON Printer Port setting stating the DMA transfer capability of your system. If you do not see any messages, DMA transfer is not available for your system.

One of the following messages may appear.

- High Speed (DMA) Transfer enabled.

  The DMA transfer is already enabled on your system.

- For higher data transfer rates, use DMA transfer.

  You may be able to make printing faster by enabling DMA transfer on your system. See page 8-33 for instructions about how to enable DMA transfer.

High Speed Copy Folder

You can change the cache folder where print data for multiple-copy printing is temporarily stored. This box is available only when more than one local hard disk drive is installed.

Configuration (Macintosh)

Clicking this button in the Utility dialog box opens the Configuration dialog box, where you can choose how the StatusMonitor notifies you in case of an error or if a warning message becomes necessary. You can also choose when the printer status check will be carried out as well as choose the folders for the temporary spooling of print data and for multiple-copy print data storage.

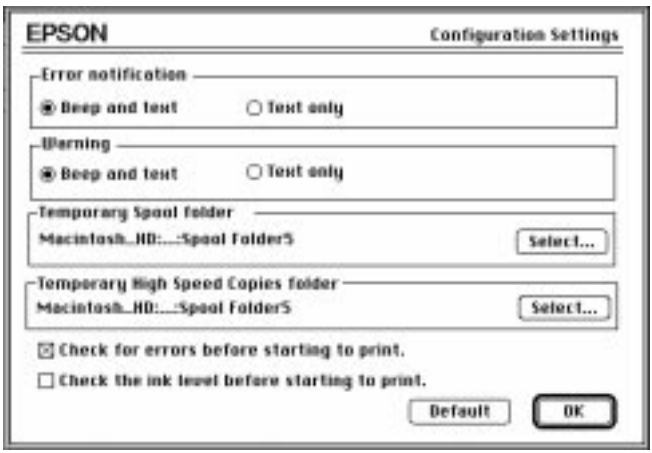

Using the EPSON Status Monitor 2 Utility

The EPSON Status Monitor 2 utility for Windows 95 allows you to monitor your printer's status, alerts you when printer errors occur, and provides troubleshooting instructions when needed.

Note:
To monitor your printer through a network, you must install an optional Type B Ethernet Interface Card (C82357) in your printer and use the Status Monitor utility that comes with this interface card. See the manual that comes with the interface card for instructions on using the Status Monitor in a network environment.

Before using the Status Monitor, be sure to read the README file located in the EPSON folder on your hard drive. This file contains the latest information on the Status Monitor.

Opening EPSON Status Monitor 2

After you install EPSON Status Monitor 2 and restart your computer, you will find a printer-shaped background monitoring icon on the taskbar at the bottom of your computer screen.

To open the EPSON Status Monitor 2 window shown on the next page, double-click the background monitoring icon. You can also open this window from Start. Click Start, point to Programs, and Epson, then click the EPSON Status Monitor icon.

Checking the Printer Status

This section describes how to use the Status Monitor to get general and detailed printer status information and summarizes the EPSON Status Monitor 2's main features.

EPSON Status Monitor 2 window

You can access many Status Monitor menu commands directly by clicking the buttons on the toolbar from this window. When you point to a toolbar button, the corresponding menu command appears briefly on your screen, and an explanation of the button's function appears in the status bar at the bottom of the EPSON Status Monitor 2 window.

To view this window, see "Opening EPSON Status Monitor 2" on the previous page.

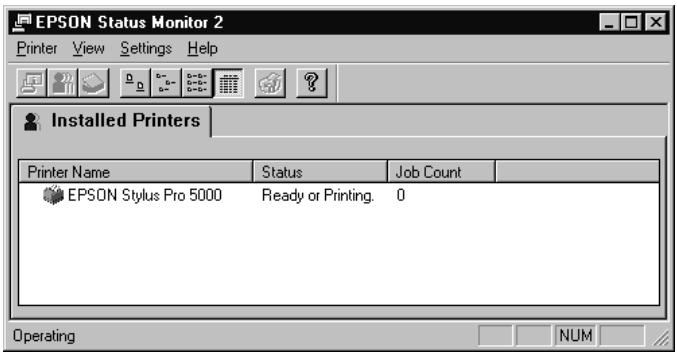

Toolbar and Status bar

You can access many Status Monitor menu commands by clicking the buttons on the toolbar. When you point to a toolbar button, the corresponding menu command appears briefly on your screen, and an explanation of the button's function appears in the status bar at the bottom of the EPSON Status Monitor 2 window.

Installed Printers list

This list displays information on the EPSON printers connected directly to your computer. If you select List from the View menu, this list displays only the printer names and icons. If you select Details, the list displays the following information: Printer Name, Status, and Job Count.

Note:
You can rearrange the order of the printers in the list by changing the priority of the printer information shown in the Printer Name, Status, and Job Count columns. Click the Printer Name, Status, *or* Job Count *title bar to change the priority.*

- Printer Name

  When you install the Status Monitor, it automatically adds the names and icons of the EPSON printers connected to your computer to this list. You can add or delete printers to be monitored by choosing Add Printer or Delete Printer from the Settings menu. To save computer memory, delete printers you do not need to monitor from the Installed Printers list. (Doing so does not remove the printer driver from your computer.)

  The icons that appear beside the printer names change color to reflect changes in printer status. Green indicates a ready status, yellow indicates the need for routine maintenance, red indicates a printer error that makes printing impossible, and a dimmed icon indicates a communication problem between the Status Monitor and the printer. See online help for more information.

- Status

  The Status column displays brief messages describing the current status of the printer.

- Job Count

  The Job Count column displays the number of jobs waiting to print.

Printer menu

This menu allows you to get detailed information on printer and print job status for any printer you select in the Installed Printers list.

Click the Printer menu on the EPSON Status Monitor 2 window to access the following settings.

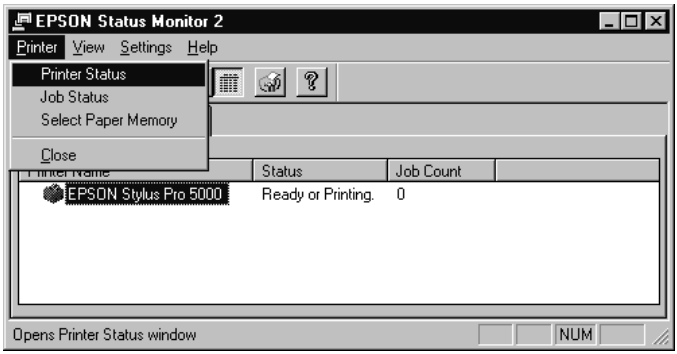

- ❑ Printer Status — Opens the Printer Status window, which provides detailed information on the selected printer's status.
- ❑ Job Status — Provides details on jobs waiting to print.
- ❑ Close — Closes the EPSON Status Monitor 2 window.
- ❑ Select Paper Memory — Not available.

For more information on using the Printer Status window, see page 5-16.

View menu

This menu lets you control the appearance and content of the EPSON Status Monitor 2 window and the Installed Printers list.

Click the View menu on the EPSON Status Monitor 2 window to access the following settings.

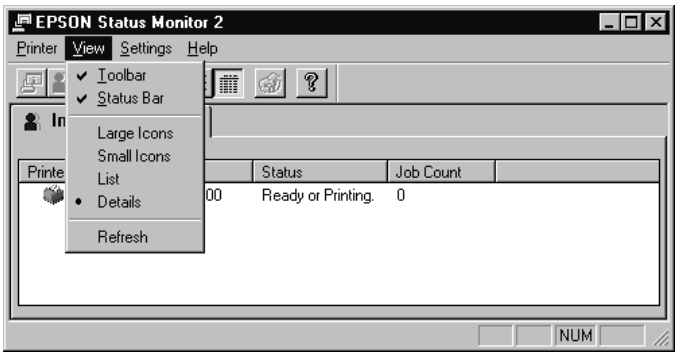

❑ Toolbar / Status bar	Shows or hides the toolbar and status bar in the EPSON Status Monitor 2 window.
❑ Large icon / Small icon	Changes the size of the printer icons in the Installed Printers list.
❑ List	Displays only the printer name in the Installed Printers list.
❑ Details	Displays the printer name, printer status, and number of jobs waiting to print in the Installed Printers list.
❑ Refresh	Updates the status information shown in the Installed Printers list.

Settings menu

This menu allows you to control the Status Monitor's monitoring interval and background monitoring feature, as well as add and delete printers from the Installed Printers list.

Click the Settings menu on the EPSON Status Monitor 2 window to access the following settings.

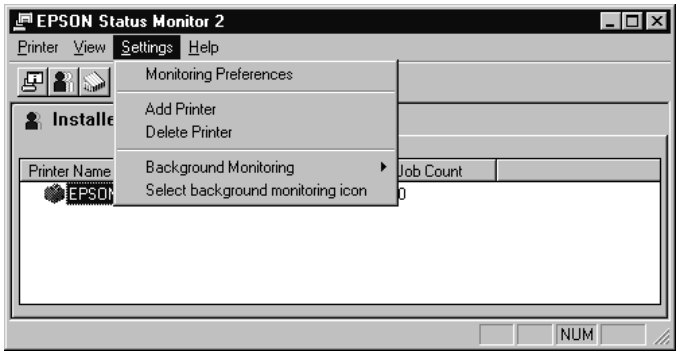

- ❑ Monitoring Preferences — Opens the Monitoring Preferences dialog box, where you can adjust the monitoring interval and make the background monitoring settings for the selected printer. For more information, see "Turning on background monitoring" on page 5-21.
- ❑ Add Printer /Delete Printer — Allows you to select the printers you want to monitor.
- ❑ Background Monitoring — Activates the Status Monitor.

Note:
The Background Monitoring and Status Alert settings in the Monitoring Preferences dialog box are not available while the Status Monitor is inactive.

❑	Select background monitoring icon	Changes the shape of the icon that appears on the taskbar when background monitoring is active.

For more information on using the background monitoring feature, see page 5-20.

Help menu

Click Help in the EPSON Status Monitor 2 window to view online help. Click About to view the Status Monitor's version number and copyright information.

Printer Status window

The Printer Status window shown below provides detailed information on the status of a selected printer. The Printer Status window has two menus; Current Status and Printer Information. See the next page for information on these menus.

To open the Printer Status window, double-click a printer in the Installed Printers list, or select the printer and then choose Printer Status from the Printer menu of the EPSON Status Monitor 2 window. You can also access the Printer Status window by clicking the Details button in a Status Alert dialog box. For information on the Status Alert dialog box, see "Setting Monitoring Preferences" on page 5-20.

To open a menu, click the corresponding tab along the top of the Printer Status window.

Current Status menu

This menu provides you with detailed printer status information through a graphic display and a status message box. The appearance of the printer illustration in the graphic display changes to reflect the current printer status, described in the adjacent message box. If a printer error occurs, troubleshooting tips appear in the message box at the bottom of this menu.

Consumables menu

This menu provides you with detailed information on the kind of paper loaded in the printer and the amount of ink remaining. You can also use this menu to select whether the printer driver verifies that the paper selected in the printer driver matches the paper loaded in the printer.

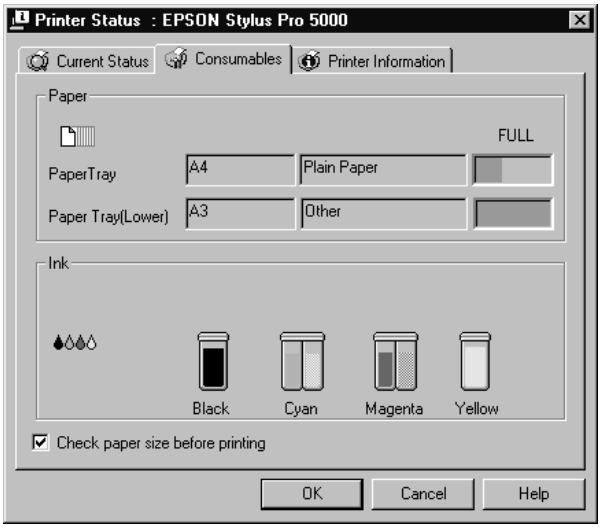

Printer Information menu

If your printer is connected to your computer through a network, this menu provides information on network connections and other printer resources.

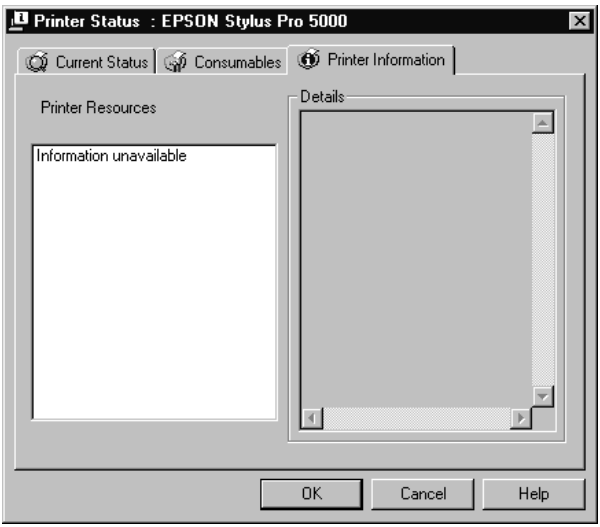

Setting Monitoring Preferences

You can adjust the monitoring interval (the length of time between status information updates for the selected printer) and turn on the background monitoring feature in the Monitoring Preferences dialog box. To open the Monitoring Preferences dialog box, see “Turning on background monitoring” on the next page.

When you turn on the background monitoring feature in the Monitoring Preferences dialog box, the Status Monitor checks the selected printer status “in the background” whenever you are using your computer (even if an application is running). The Status Monitor informs you of the printer status by displaying the Status Alert dialog box, shown below, in the lower right-hand corner of your computer screen. The Status Alert dialog box contains short messages describing printer status, and provides a Details button that allows you to open the Printer Status window for a selected printer.

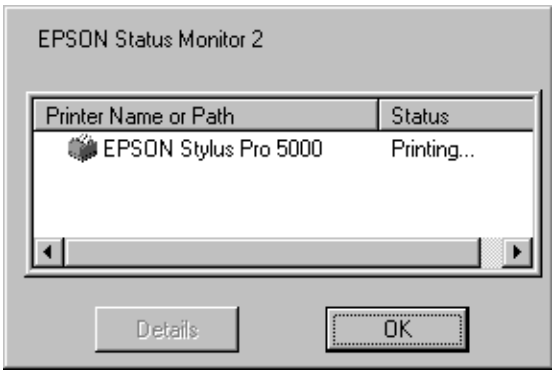

Turning on background monitoring

Follow the steps below to turn on background monitoring and specify when the Status Alert dialog box appears.

1. Make sure the Status Monitor is active. (It is active if a printer-shaped icon appears on the taskbar at the bottom of your computer screen.) If the Status Monitor is inactive, open the EPSON Status Monitor 2 window from Start, as described on page 5-10. Then point to Background Monitoring on the Settings menu and click Monitor from restart or Monitor now to enable the Status Monitor.

   Note:
   The Background Monitoring and Status Alert settings are not available while the Status Monitor is inactive.

2. Select the printer you want to monitor from the Installed Printers list, and then click Monitoring Preferences on the Settings menu. The dialog box below appears.

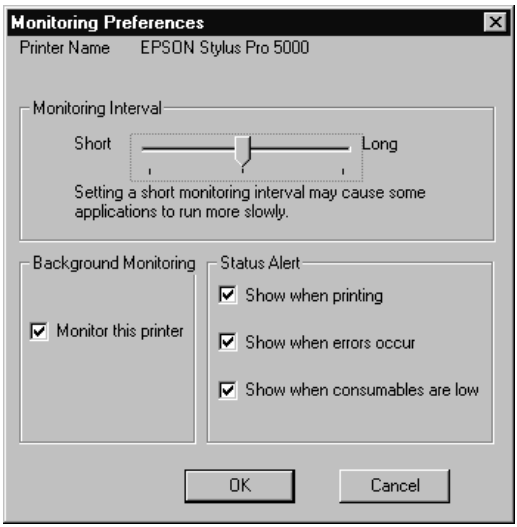

3. Use the slider to adjust the monitoring interval, if necessary.

   Note:
   Setting a short monitoring interval may cause some applications to run more slowly.

4. Click Monitor this printer to turn on background monitoring for the selected printer and to view the Status Alert options.

5. Click the Status Alert options to specify when you want the Status Alert dialog box to appear.

6. Click OK to save your settings and close the Monitoring Preferences dialog box.

Using the background monitoring icon

A printer-shaped background monitoring icon appears on the taskbar whenever the Status Monitor is active.

Double-clicking the background monitoring icon opens the EPSON Status Monitor 2 window. Right-clicking this icon opens a pop-up menu where you can choose whether the Status Alert dialog box will appear in front of other windows on the desktop. This pop-up menu also allows you to deactivate the Status Monitor. When you deactivate the Status Monitor, the background monitoring icon disappears from the taskbar. To activate the Status Monitor again, see step 1 of “Turning on background monitoring” on page 5-21.

Using the EPSON StatusMonitor (Macintosh)

To use the StatusMonitor, click the EPSON StatusMonitor button in the Utility dialog box. The following dialog box appears:

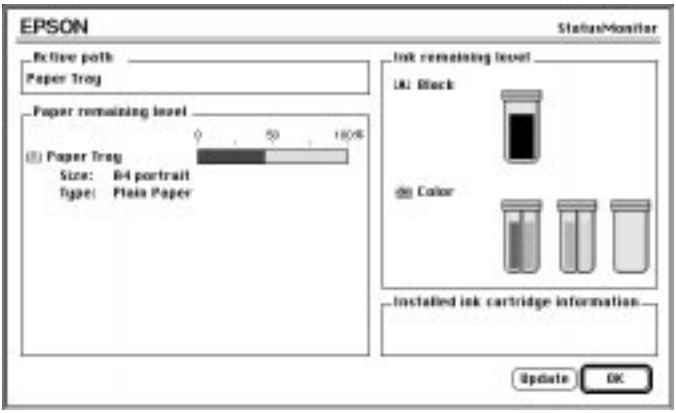

The StatusMonitor checks the amount of ink remaining when it is first opened. To recheck the ink-level information, click the Update button.

Active path

The active paper path, or currently selected paper source, for the printer appears in this box. If paper is loaded in the front or rear manual feed slot, that manual feed slot is the active paper path. If no paper is loaded in either manual feed slot, the paper tray is the active paper path. If the 250 sheet lower paper cassette is installed and no paper is loaded in the standard paper tray, the lower paper tray becomes the active paper path.

Paper remaining level

Shows the amount of paper remaining as a percent of the total paper capacity of the paper trays.

Warning:
The number of sheets you can load varies by media type. See page 2-5 for details on loading special media.

Size

Shows the paper size lever setting on the paper tray.

Type

Shows the media type lever setting on the paper tray.

Note:
If Other *appears as the Size or Type setting, the paper size or the media type lever setting on the paper tray has been set to Other.*

The StatusMonitor automatically detects printer errors, and you can choose how the StatusMonitor notifies you of the error using the Configuration setting dialog box. Click the Configuration button in the Utility dialog box. See page 5-9 for details.

Ink remaining level

Shows the amount of ink remaining in the ink cartridges.

Chapter 6

The Control Panel

Using the Control Panel 6-2

Using Special Power-On Functions 6-3
- Nozzle check and printer settings 6-4
- Print head alignment 6-5
- Paper size and media type verification 6-7
- Parallel interface ECP mode 6-8
- Platen gap adjustment for the manual feed slots 6-9

Using the Control Panel

The lights and buttons on the control panel help you easily control most common printer operations. The lights also provide you with a means to diagnose printer errors, as described on page 8-2.

***Note**:*
Software usually overrides control panel selections. Use your software to select print functions whenever possible.

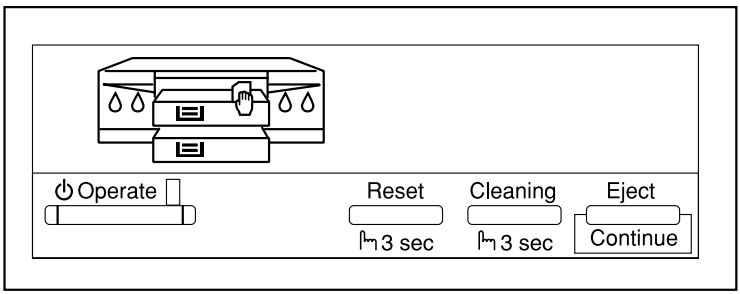

Button	Function
⏻ **Operate**	Turns the printer on and off.
Reset	Clears print data in the printer memory if pressed and held for three seconds.
Cleaning	Cleans the print head (when the Ink Out lights are off) if pressed and held for three seconds.
Eject	When paper is not loaded, loads and ejects paper. When paper is loaded, ejects paper. If a paper mismatch error occurs, continues printing.

Using Special Power-On Functions

The following functions are enabled if you hold down the corresponding button (in parentheses) while turning on the printer. See the following sections for more details.

- Nozzle check and printer settings (Reset)

  Prints a nozzle check pattern and printer settings.

- Print head alignment (Reset + Eject)

  Enters the printer-adjustment mode.

- Paper Size and Media Type verification (Cleaning)

  Enables and disables the printer's paper size and media type check. This function will notify you through the control panel lights if there is a mismatch between the printer's paper size and media type lever positions and the Paper Size and Media Type settings you have made in the printer driver or your application. This is useful for when the printer driver cannot perform a similar check due to a lack of bi-directional communication between the printer and your computer.

- Parallel interface ECP mode (Reset + Cleaning)

  Enables or disables ECP for the printer parallel interface.

- Platen gap adjustment for the front and rear manual feed slots (Eject)

  Changes the adjustment mode for thickness of paper fed from the manual feed slots: Auto or Fixed (thick paper).

Nozzle check and printer settings

The nozzle check and printer settings function prints the same nozzle check pattern that the Nozzle Check utility prints, but it also includes a list of printer settings. This function can only be activated from the control panel, as described below.

1. Make sure the printer is turned off.

2. Load A4 or letter size plain paper in the printer.

3. Hold down the Reset button and press the Operate button to turn the printer on. The printer prints a nozzle check pattern and settings list similar to the one below.

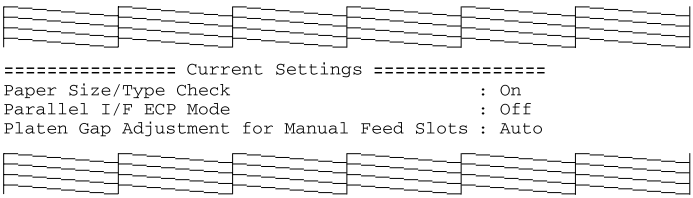

The above sample is in black and white, but the actual pattern prints in color.

4. Check the nozzle check pattern and settings list.

5. If the printed pattern is faint or some dots are missing, like in the sample shown below, try cleaning the print head as described on page 6-2 and 8-37.

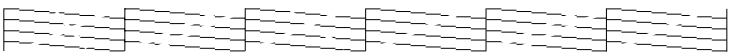

Print head alignment

In addition to aligning the print head from the printer software, you can also align the head using the control panel. See also “Aligning the Print Heads” on page 8-41. Follow the instructions below to align the print head using the control panel:

1. Make sure the printer is turned off.

2. Load A4 or letter size plain paper in the printer.

3. Hold down both the Reset and Eject buttons and press Operate button to turn the printer on.

4. The Operate light and the lower paper tray light start flashing and the printer enters the print head alignment mode. The printer prints a pattern similar to the one below.

   <Example>

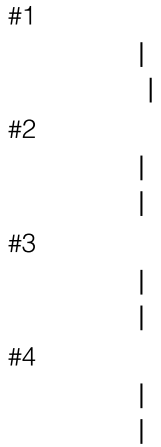

5. Check the printed pattern and select the numbered pattern, from #1 to #4, that is misaligned. (It multiple numbered patterns are misaligned you will need to repeat this step.) For example, pattern #1 above requires alignment. Press the Reset button to select a pattern until the ink out lights indicate the appropriate numbered pattern, as shown below.

Ink out light	#1	#2	#3	#4
Black	◊	♦	♦	♦
Cyan	♦	◊	♦	♦
Magenta	♦	♦	◊	♦
Yellow	♦	♦	♦	◊

◊ = on, ♦ = off

6. Press the Eject button to enter your selection.

7. The printer prints seven patterns, similar to the ones below. Under this mode, the paper tray lights turn on while the operate and lower paper tray lights flash.

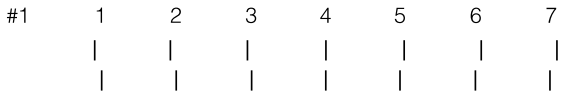

8. Determine which set of lines on the printed sheet is vertically aligned, and select the corresponding number using the Reset and Eject buttons and the table below. Press the Eject button, repeatedly if necessary, to move the selection to the right and press the Reset button to move the selection to the left, until the ink out lights' status indicates that the vertically aligned pattern has been selected.

Ink out light	#1	#2	#3	#4	#5	#6	#7
Black	◊	◊ (flashing)	♦	♦	♦	♦	♦
Cyan	♦	♦	◊	◊ (flashing)	♦	♦	♦
Magenta	♦	♦	♦	◊ (flashing)	◊	♦	♦
Yellow	♦	♦	♦	♦	♦	◊ (flashing)	◊

◊ = on, ◊ (flashing) = flashing, ♦ = off

9. Press the Cleaning button to enter your selection. The printer goes back to the print head alignment mode.

10. If other numbered patterns in step 4 are misaligned, repeat steps 5 through 9.

11. After finishing the print head alignment, press the Operate button to save the alignment setting, and turn off the printer.

Paper size and media type verification

If this setting is on, the printer verifies whether the paper size lever and media type lever positions match the corresponding settings in the printer driver. The control panel lights will indicate if they don't match. To enable this function or check whether this function is enabled, follow the steps below.

1. Make sure the printer is turned off.

2. Hold down the Cleaning button and press the Operate button. The Operate light flashes and the paper tray light turns on.

3. Using the table below, confirm your setting preference and press the Reset button to toggle the setting, if necessary.

Setting	Light status
On (enabled):	Black ink out light is on
Off (disabled):	Cyan ink out light is on

4. Press the Eject button to exit the setting mode or press Operate to exit the mode and turn the printer off.

Parallel interface ECP mode

If your computer and the computer's interface support ECP mode (see your computer documentation for details), you can set the printer parallel interface mode to ECP, which increases communication speed between the printer and computer. If you encounter any printing problem, turn this setting off. To make or verify this setting, follow the steps below.

1. Make sure that the printer is turned off.

2. Hold down the Reset and Cleaning buttons and press the Operate button to turn on the printer. The Operate light and the paper tray light start flashing.

3. Using the table below, confirm your setting preference and press the Reset button to toggle the setting, if necessary.

Setting	Light status
On (enabled):	Black ink out light is on
Off (disabled):	Cyan ink out light is on

4. Press the Eject button to exit the setting mode or press Operate to exit the mode and turn the printer off.

Platen gap adjustment for the manual feed slots

When the platen gap adjustment setting is enabled and you load paper in the front or rear manual feed slot, the printer increases the gap between the platen and the print head to avoid smearing ink on thick paper. If you load paper in the paper tray, leave this setting set to Auto, and the printer will automatically determine the proper gap according to the Media Type and Paper Size settings you make in the printer driver. If ink smears on your printout when you load paper in the front or rear feed slot. (especially if you print on thick documents such as envelopes), change this setting to Fixed (thick paper). To make this setting, follow the steps below.

1. Make sure that the printer is turned off.

2. Hold down the Eject button and press the Operate button to turn on the printer. You can see the Operate light and the lower paper tray light flash.

3. Using the table below, confirm your setting preference and press the Reset button to toggle the setting, if necessary.

Setting	Light status
Auto:	Black ink out light is on
Fixed (thick paper):	Cyan ink out light is on

4. Press the Eject button to exit the setting mode or press Operate to exit the mode and turn the printer off.

5. Return the setting back from Fixed (thick paper) to Auto after you finish printing on thick paper.

Chapter 7

Maintenance and Transportation

Replacing an Ink Cartridge 7-2

Cleaning the Printer 7-6

Transporting the Printer 7-7
Setting up the printer after transporting it 7-9

Replacing an Ink Cartridge

The printer's indicator lights will inform you when it is time to obtain a replacement ink cartridge and when it is time to replace an empty cartridge.

Note:
If you remove an ink cartridge and then reinstall it, the printer cannot determine the correct level of ink remaining and the corresponding ink out light may not flash to warn you even when the cartridge is almost out of ink. Only install unused ink cartridges.

EPSON recommends the use of genuine EPSON ink cartridges. Other products not manufactured by EPSON may cause damage to your printer not covered by EPSON's warranties.

The following table describes the lights status and actions required.

Light status	Actions required
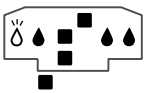	Obtain a replacement black ink cartridge (S020118).
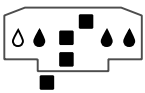	Replace the empty black ink cartridge.
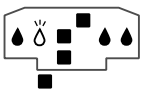	Obtain a replacement cyan ink cartridge (S020147).
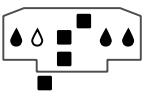	Replace the empty cyan ink cartridge.
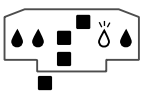	Obtain a replacement magenta ink cartridge (S020143).

♦ and ■ = off, ◊ and □ = on, ◊̈ and □̈ = flashing

Light status	Actions required
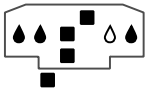	Replace the empty magenta ink cartridge.
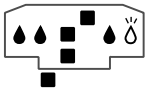	Obtain a replacement yellow ink cartridge (S020122).
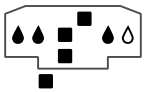	Replace the empty yellow ink cartridge.

♦ and ■ = off, ◊ and □ = on, ⁂ and ⁂ = flashing

Note:
When one of the ink cartridges is empty, the printer cannot continue to print.

Caution:
Leave the old cartridge installed in the printer until you are ready to replace it with a new one.

To replace an ink cartridge, follow the steps below.

1. Make sure the printer is on. Determine which cartridge needs to be replaced as indicated by the ink out light that is flashing or on.

2. Open the appropriate ink cartridge compartment door. The black and cyan ink cartridges are located in the left ink cartridge compartment, and the yellow and magenta ink cartridges are located in the right ink cartridge compartment.

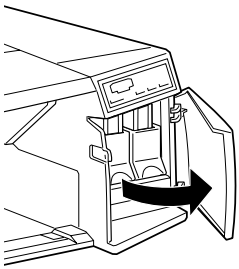

3. Lift up the ink cartridge clamp for the empty ink cartridge, then carefully pull the empty cartridge straight out of the printer.

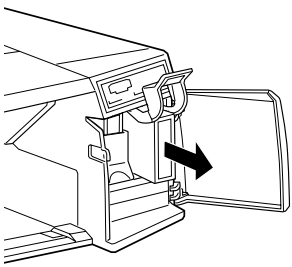

Warning:
If ink gets on your hands, wash them thoroughly with soap and water. If ink gets into your eyes, flush them immediately with water.

4. Make sure the replacement ink cartridge is the correct color, and remove it from its package.

5. Hold the ink cartridge with the arrow mark face up and pointing to the rear of the printer, and fully insert the ink cartridge.

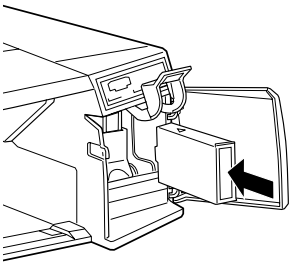

6. Close the clamp until it clicks into place. Make sure the corresponding ink out light goes off.

Note:
If the ink out light remains on, the ink cartridge may not be installed correctly. Remove the ink cartridge and then reinsert it as described above.

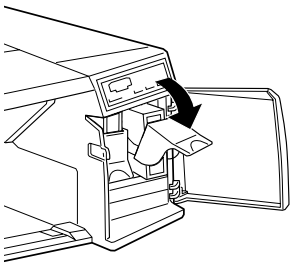

7. Close the ink compartment door, and resume printing.

Cleaning the Printer

To keep your printer operating at its best, you should clean it thoroughly several times a year.

1. Make sure the printer is turned off and all the lights are off. Then unplug the power cord.

2. Remove any paper from the sheet feeder.

3. Use a soft brush to carefully clean away all dust and dirt.

4. If the outer case or the inside of the sheet feeder is dirty, clean it with a soft, clean cloth dampened with mild detergent. Keep the printer cover closed to prevent water from getting inside.

5. If the inside of the printer accidentally gets soiled with ink, wipe it off with a damp cloth.

Warning:
Be careful not to touch the gears inside the printer.

Caution:

- *Never use alcohols or thinners to clean the printer; these chemicals can damage the components as well as the case.*
- *Be careful not to get water on the printer mechanism or electronic components.*
- *Do not use a hard or abrasive brush.*
- *Do not spray the inside of the printer with lubricants; unsuitable oils can damage the mechanism. Contact your dealer or a qualified service person if lubrication is needed.*

Transporting the Printer

If you need to transport your printer some distance, carefully repack it using the original box and packing materials as follows:

1. Turn on the printer.

2. Remove any paper in the printer and in the paper tray. Press the Eject button to eject any paper that has been fed into the printer.

3. Turn off the printer and make sure the print heads are in the home (far right) position. If they are not, turn the printer back on, wait until they stop moving and are in the home position; then turn off the printer.

   Note:
   After turning off the printer, the Operate light may flash for a while. Do not unplug the power cord until the light goes off.

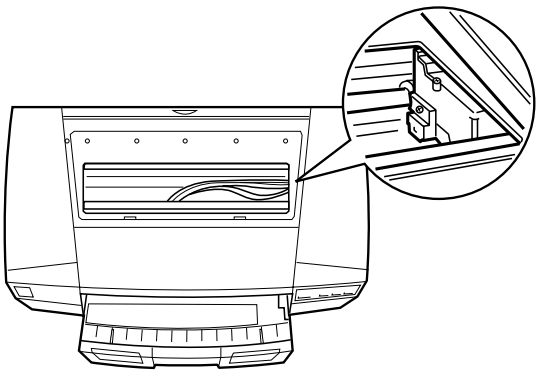

4. Remove all four of the ink cartridges and store them in separate plastic bags. Close the ink cartridge clamps and compartment covers.

   Note:
   If you only need to transport your printer a short distance, do not remove the ink cartridges.

5. Unplug the power cord from the electrical outlet; then disconnect the interface cable from the printer.

6. Remove the paper tray.

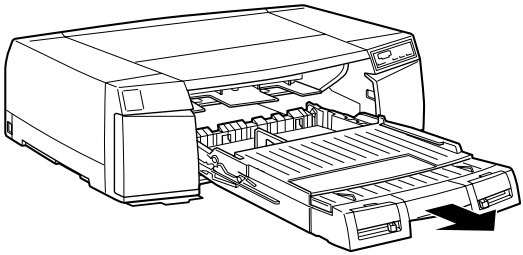

7. Attach the protective materials you removed when you unpacked the printer.

8. Repack the printer, paper tray, power cord, and any other parts in the original box.

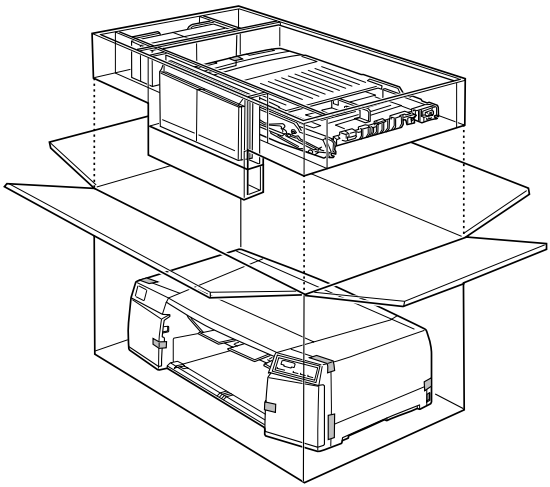

9. Remember to keep the printer level during transport.

Setting up the printer after transporting it

The steps you need to take to set up the printer after transporting it are almost identical to the steps carried out the first time you set up the printer. When you set up the printer again, refer to the *Setup Guide*. However there are some points to be noted:

- ❑ The first time you start printing after transporting the printer, the print head nozzles may be clogged. EPSON recommends you clean the print head after transporting the printer. See page 8-37 for more information.

- ❑ EPSON recommends installing new ink cartridges after transporting the printer. If you reinstall the cartridges you removed before transporting, the printer cannot determine the correct level of remaining ink and the ink out light may not flash to warn you when the cartridge is almost out of ink.

Chapter 8
Troubleshooting

Diagnosing the Problem 8-2
Error indicators 8-2
Status Monitor 8-7
Printer operation check 8-7

Problems and Solutions 8-9
Power supply 8-10
Operation 8-11
Paper handling 8-16
Printing quality 8-20
Printer utilities 8-27

Clearing a Paper Jam 8-29

Increasing the Print Speed 8-31
Using DMA transfer (Windows 95) 8-33

Cleaning the Print Head 8-37
Using the Head Cleaning utility 8-37
Using the control panel 8-40

Aligning the Print Head 8-41

Uninstalling the Printer Software (Windows 95) 8-42

Contacting Customer Support 8-43
For United Kingdom and the Republic of Ireland Users 8-43
For Australian Users 8-46
For Singapore Users 8-48
For Hong Kong Users 8-48
For Philippines Users 8-49

Diagnosing the Problem

Troubleshooting printer problems is best handled in two easy steps: first diagnose the problem, then apply likely solutions until the problem is fixed. The information that you need to diagnose the most common problems is provided by the printer's control panel lights and by the status monitor utility (EPSON Status Monitor 2 for Windows 95 and EPSON Status Monitor for Macintosh only). In addition, you can determine whether a problem lies with the printer itself or with the computer by performing a printer operation check.

In "Problems and Solutions" later in this chapter you can find causes and solutions to specific printer problems. Use the information presented in this chapter to pinpoint the source of your problem, then apply the recommended solutions until the problem is solved.

Error indicators

You can identify many common printer problems with the lights on the control panel. If your printer stops working and the lights are on or flashing, use the following table of panel light patterns to diagnose the problem, then follow the recommended corrective measures.

State of panel lights	Problems and solutions
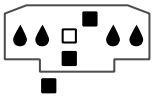	***No paper is loaded in the standard paper tray.***
	Load paper in the paper tray or a manual feed slot.
	Paper failed to load from the standard paper tray.
	Make sure paper is correctly loaded in the paper tray. See page 2-7 for instructions about loading paper in the paper tray.
	The standard paper tray is not installed.
	Make sure that the paper tray is properly installed in the printer.
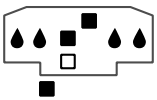	***No paper is loaded in the lower (optional) paper tray.***
	Load paper in the lower paper tray or a manual feed slot.
	Paper failed to load from the lower (optional) paper tray.
	Make sure paper is correctly loaded in the lower paper tray. See page 2-15 for instructions about loading in the paper tray.
	The lower paper tray is not installed in the lower paper cassette.
	Make sure that the paper tray is properly installed in the lower paper cassette.
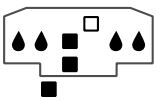	***The Paper Source setting in the printer driver is set to Manual Feed, but no paper is loaded in either of the manual feed slots.***
	Load paper in the front or rear manual feed slot.
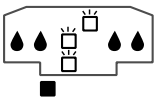	***Paper has jammed in the printer.***
	Turn the printer off and remove the jammed paper from the printer. See page 8-29 for details.
	The paper path cover is open.
	Close the paper path cover.

◖ and ■ = off, ◊ and □ = on, ☼ and ☐ = flashing

State of panel lights	Problems and solutions
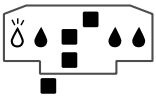	***The black ink cartridge is nearly empty.***
	Obtain a replacement black ink cartridge (S020118).
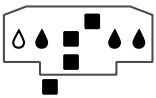	***The black ink cartridge is empty.***
	Replace the black ink cartridge with a new one (S020118). See page 7-2 for instructions.
	The black ink cartridge is not installed.
	Install the black ink cartridge.
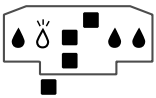	***The cyan ink cartridge is nearly empty.***
	Obtain a replacement cyan ink cartridge (S020147).
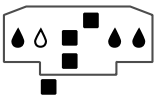	***The cyan ink cartridge is empty.***
	Replace the cyan ink cartridge with a new one (S020147). See page 7-2 for instructions.
	The cyan ink cartridge is not installed.
	Install the cyan ink cartridge.
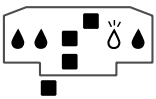	***The magenta ink cartridge is nearly empty.***
	Obtain a replacement magenta ink cartridge (S020143).
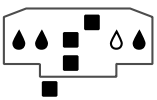	***The magenta ink cartridge is empty.***
	Replace the magenta ink cartridge with a new one (S020143). See page 7-2 for instructions.
	The magenta ink cartridge is not installed.
	Install the magenta ink cartridge.

♦ and ■ = off, ◊ and □ = on, ☼ and ☐ = flashing

State of panel lights	Problems and solutions
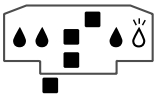	***The yellow ink cartridge is nearly empty.***
	Obtain a replacement yellow ink cartridge (S020122).
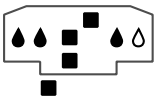	***The yellow ink cartridge is empty.***
	Replace the yellow ink cartridge with a new one (S020122). See page 7-2 for instructions.
	The yellow ink cartridge is not installed.
	Install the yellow ink cartridge.
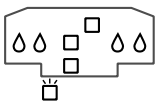	***A memory error occurred when printing in High Speed Copy mode. There is a discrepancy between the SIMMs installed in the printer and the setting made in the Printer and Option Information dialog box in the Utility menu.***
	Cancel printing. Make sure the Installed Memory setting in the Printer and Option Information dialog box, accessible from the Utility menu, matches the amount of SIMM memory installed in the printer, then start printing. ***Note:*** *This error may occur after the first page is printed.*
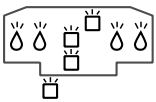	***The print head is not operating properly.***
	Turn off the printer. Check the inside of the printer for any foreign objects or pieces of paper. Remove all foreign objects and paper, then turn on the printer again.
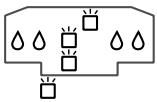	***Maintenance required.***
	Turn off the printer and contact your dealer.

♦ and ■ = off, ◊ and □ = on, ☼ and ☐ = flashing

Paper size and media type verification error

The error light patterns shown in the table below may appear under the following conditions:

- ❑ The paper size and media type verification setting is set to on using the control panel setting. See page 6-7 for more information.
- ❑ The position of the paper size or media type lever on the paper tray does not match the Paper Size or Media Type setting made in the printer driver.

Light status	Paper Source setting in the printer driver	Directions
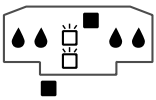	Auto Select Paper Tray Paper Tray (Lower)	Make sure that the Paper Size and Media Type settings in the printer driver, paper size and media type lever positions on the paper tray, and paper loaded in the paper tray match. Then print again. If the paper settings don't match the loaded paper, you can force the printer to print by pressing the Eject button on the control panel.
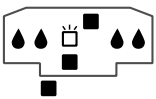	Auto Select Paper Tray	
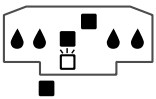	Paper Tray (Lower)	

♦ and ■ = off, ◊ and □ = on, ☼ and ☐ = flashing

Status Monitor

If you are using Windows 95 or a Macintosh, you can use the Status Monitor 2 or StatusMonitor to check the printer's current status. For more details, see page 5-10 (for Windows) or page 5-23 (for Macintosh).

Printer operation check

Printing a Nozzle Check Pattern and Printer Settings Sheet using the control panel can help you determine whether the problem comes from the printer or the computer.

To perform a printer operation check, follow these steps:

1. Make sure both the printer and computer are turned off.

2. Unlock the wire clips on both sides of the parallel interface connector and remove the ground connecter, if necessary. Disconnect the cable from the printer's interface connector.

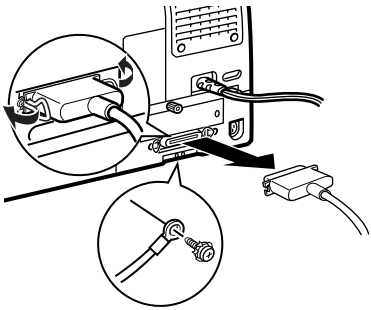

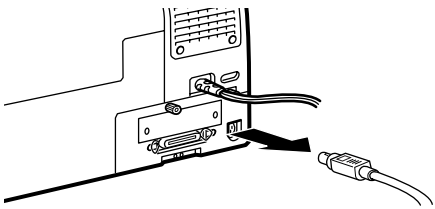

3. Make sure that paper is loaded in the paper tray.

Caution:
Use paper at least 182 mm (7.17 inches) wide; for example, A4 size paper loaded short edge first. Otherwise, the print head will spray ink directly onto the platen, which could mar future printouts.

4. Hold down the Reset button and press the ⏻ Operate button to turn the printer on. Then release both buttons.

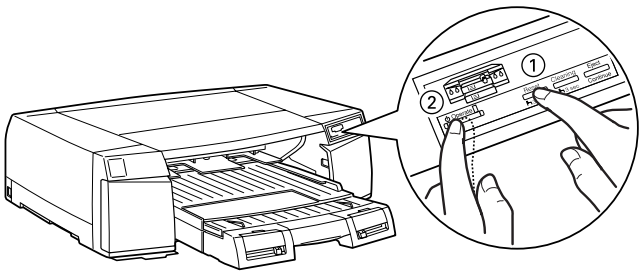

The printer prints a nozzle check pattern that includes the version of your printer's ROM, the printer default settings, and a nozzle check pattern. Here is a typical printout:

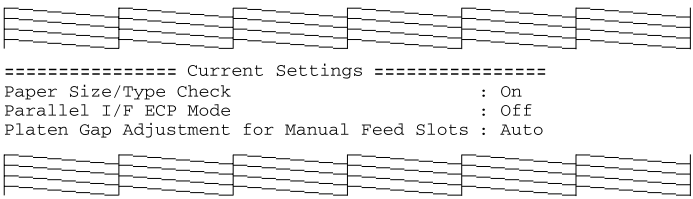

The above sample is in black and white, but the actual test prints in color.

5. Press the ⏻ Operate button to turn off the printer after it finishes printing the operation check page.

- ❑ If the operation check results appear as shown in step 4, the printer itself is all right and the problem probably lies in the printer software settings, application settings, the interface cable (be sure to use a shielded cable), or the computer itself.

- ❑ If the operation check does not print satisfactorily, for example, if any segment of the printed lines is missing, as shown below, there is a problem with the printer. This problem could be a clogged ink nozzle or a misaligned print head. See "Problems and Solutions" below for possible causes and solutions to the problem, or go directly to "Cleaning the Print Head" on page 8-37.

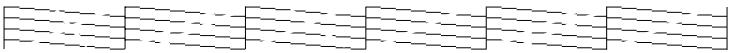

Problems and Solutions

This section divides printer problems into five categories:

Power supply . . . . page 8-10
Operation . . . . . page 8-11
Paper handling . . . page 8-16
Printing quality . . . page 8-20
Printer utilities . . . page 8-27

Go to the category for the type of problem you have and look for the description that most closely matches the problem. The most likely causes and solutions are listed first, so try them in the order that they are written until the problem is solved.

Power supply

The lights come on briefly but then go off and stay off.	
Cause	**What to do**
The printer's voltage rating may not match the voltage of your electrical outlet.	Check the printer and outlet voltage ratings. If the voltages do not match, unplug the printer immediately and contact your dealer. ***Warning:*** *Do not reconnect the power cord to an electrical outlet that does not have matching voltage.*

The printer does not work and the control panel lights are off.	
Cause	**What to do**
The printer is turned off.	Press the ⏻ Operate button. The ⏻ Operate light will come on.
The power cord is not properly plugged into the electrical outlet.	Turn off the printer, make sure the power cord is firmly plugged into the electrical outlet, and turn the printer back on.
The electrical outlet is controlled by an outside switch or automatic timer.	Use a different outlet.
The electric outlet is out of order.	Plug another electrical device into the outlet to determine whether the outlet is working. If it is not, use a different outlet.

Operation

The ⏻ Operate light is on but nothing prints.

Cause	What to do
The interface cable is not connected properly.	Confirm that the cable is fastened to the printer and the computer securely. If the cable is connected correctly, run a printer operation check as described on page 8-7. If your Macintosh has a built-in modem, connect the interface cable to the Macintosh's printer port.
Your interface cable does not meet both the printer and computer specifications.	Use an interface cable that meets both printer and computer specifications. See "Connecting the Printer to Your PC" or "Connecting the Printer to Your Macintosh" in your *Setup Guide*. Also see "Interface Specifications" in Appendix A.
Your software is not properly set up for your printer.	Make sure that your printer is properly selected in your software. Install or reinstall the printer software as described in your *Setup Guide*.

Nothing prints and the control panel lights are on or flashing.

Cause	What to do
Several common printer errors have occurred at once.	Use the table in "Error indicators" on page 8-2 to determine what combination of errors may have occurred, and apply the recommended solutions.

The printer sounds like it is printing, but nothing prints.

Cause	What to do
The print head nozzles are clogged.	Clean the print head. See "Cleaning the Print Head" on page 8-37. If this does not work after four or five trials, see below.
One or more of the ink cartridges have been used longer than six months or beyond the date on the packaging.	Try cleaning the print head. If that does not solve the problem, replace the ink cartridges as described on page 7-2.

The printer operation check prints well, but nothing prints from within an application program.

Cause	What to do
Your printer is not selected in your software.	Select your printer in the printer setup section of your software.
The interface cable does not meet both the printer and computer requirements.	Use an interface cable that meets both printer and computer specifications. See "Connecting the Printer to Your PC" or "Connecting the Printer to Your Macintosh" in the *Setup Guide*. Also see "Interface Specifications" in Appendix A.
Your computer system's memory is too small to handle the volume of data in your document.	Try reducing the image resolution of your document in your image-editing software. Install more memory in your computer if you can. Select lower resolution or less colors for your display setting as described below.

For Windows 95 and Windows NT 4.0, choose a lower resolution setting as the Color Palette setting. To access the Color Palette, click Start, point to Settings, and choose Control Panel. Then double-click the Display icon and click the Settings tab. For detailed information on making this setting, see your Windows 95 or Windows NT 4.0 user's guide.

For Windows 3.1, double-click the Windows Setup icon on the Main menu; then click Options and choose Change System Settings. Then choose a lower resolution setting for your display from the Display pop-up list. For detailed information on making this setting, see your Windows 3.1 user's guide.

If you have a display-adapter setting utility, use it to make a lower resolution setting. For detailed information, see your display board user's guide.

For Macintosh, choose Control Panel from the Apple menu and select Monitors. Select a lower resolution. For detailed information on making this setting, see your Macintosh user's guide.

Color documents print out in black and white.

Cause	What to do
Your printer is not selected in your software.	Select your printer in your software.
Color printing is not selected in your application or in the printer driver.	Select color printing in your application and the printer driver. Try to print again. If the image still comes out in black and white, try printing from another program. If this fixes the problem, contact the manufacturer of the software you had trouble with.

Printing starts too high or too low on the page.

Cause	What to do
Margins are set incorrectly in your application.	Check that the margins are set correctly in your program. See the printable area specifications on page A-5 in Appendix A.
The size of the paper loaded in the printer does not match the paper size setting within your application program or printer driver.	Load the correct size of paper, or change the paper size settings within your application program or printer driver to match the size of the paper you use.

Print speed is not what you expect.	
Cause	**What to do**
The image resolution and the amount of color used in the document may be too high.	Carefully considering your use of color and resolution can help you optimize your print times. For more details, see "Increasing the Print Speed" on page 8-31. ***Note:*** *High resolution printing and color printing significantly increase the amount of data to be processed. These two factors have the greatest effect on print speed.*

Something on the page is wrong or missing.	
Cause	**What to do**
The printer settings within your application are incorrect.	Adjust the printer settings within your application and print again. If your Macintosh has only one serial port, choose Chooser from the Apple menu and select the modem port.
The interface cable is not connected properly.	Check that the cable is securely connected to the printer and the computer. If your Macintosh has a built-in modem, connect the interface cable to the Macintosh's printer port.
An unknown problem has occurred.	Disconnect the interface cable from the computer; then try the printer operation check described on page 8-7.

The New Hardware Found screen appears even though the printer software has already been installed.	
Cause	**What to do**
This error may occur when using Windows 95.	Click the Do not install a driver (Windows will not prompt you again) button; then click OK.

Paper handling

Paper does not feed properly from the paper tray.	
Cause	**What to do**
Too many sheets are loaded in the paper tray.	Take the paper stack out of the tray, remove some sheets, and reload the stack. Before you load paper, see page 2-5 to check the amount of paper you can load in the paper tray.
The edge guides are not set correctly.	Adjust the guides against the stack of paper. See "Loading Paper in a Paper Tray" on page 2-7.
Paper is jammed in the paper path.	Take all of the paper out of the paper trays and manual feed slots, and reload paper in the paper tray. If all of the paper out lights continue to flash, turn off the printer and pull out any paper that may be jammed in the printer. See page 8-29 for more details.
Paper has been compressed and is sticking together.	Fan your stack of paper before loading it.
The paper is curled or folded.	Use flat, undamaged paper.
The paper is old or creased.	Use only new, smooth sheets of paper.

The paper's size is not compatible with the printer.	Use paper that meets the paper requirements for this printer. See "Paper" on page A-2.
The paper size and/or media type lever positions are not correct.	Make sure that all the printer driver settings, paper size and media type lever positions on the paper tray, and paper loaded in the paper tray match. If you load paper that is not listed on the lever position settings, select Other.
The edge guides are positioned too tightly and are squeezing the paper, or they are too loose and are not guiding the paper.	Position the edge guides snug against the paper edges, but not too tight.
Paper was loaded in a paper path that does not support that kind of paper.	Make sure you load paper in an appropriate paper path. Be aware that the correct paper path(s) varies depending on the type, size, and orientation of the paper you load. See page 2-3 for the instructions.
When loading certain kinds of paper, you need to put a support sheet under the paper stack.	See page 2-5 for the information.
When printing long documents or many sheets of certain kinds of EPSON special paper, you need to load and eject the cleaning sheet to clean the paper path.	See page 1-6 for details.

The printer loads more than one sheet at a time.	
Cause	**What to do**
Too many sheets are loaded in the paper tray.	Take the paper stack out of the tray, remove some sheets, and reload paper. Before you load paper, see page 2-5 to check the amount of paper you can load in the paper tray.
The edge guides are not set correctly.	Adjust the guides against the stack of paper. See “Loading Paper in a Paper Tray” on page 2-7.
The paper was not fanned before being loaded in the sheet feeder.	Remove the paper stack and fan it. Tap it on a flat surface to even the edges. Then reload the paper.
The edges of the paper stack are not even.	Remove the paper stack and tap it on a flat surface to even the edges. Then reload the paper.
The paper is too thin.	Make sure the paper meets the paper requirements for this printer. See “Paper” on page A-2.

Single sheets do not feed properly from a manual feed slot.	
Cause	**What to do**
Paper is curled or folded.	Use flat, non-damaged paper.
The paper may be too thick or too thin to be fed.	See “paper” on page A-2.
The single sheets are not loaded deeply enough.	Load single sheets into the manual feed slots until they meet resistance.

Ejected paper is wrinkled.	
Cause	**What to do**
The paper is damp.	Do not store your paper in a damp or humid environment. Store paper in its original packaging.
The paper is too thin.	Make sure the paper meets the paper requirements for this printer. See “Paper” on page A-2.

Paper does not fully eject.	
Cause	**What to do**
The paper is too long.	Press the Eject button to eject the paper. Use paper that meets the paper requirements for this printer. See “Paper” on page A-2.

Paper does not fully eject.	
Cause	**What to do**
The paper size and / or media type lever positions are not correct.	Make sure that all the printer driver settings, paper size and media type lever positions on the paper tray, and paper loaded in the paper tray match. If you are loading paper that is not listed on the lever position settings, select Other.

Paper feed or paper jam problems occur frequently.	
Cause	**What to do**
Sheets of paper are stuck together.	Fan the stack of paper and align the edges before loading.
The paper is too thin or rough.	Make sure the paper meets the paper requirements for this printer. See “Paper” on page A-2.
Too many sheets are loaded in the paper tray.	Check the paper package and see “Paper Tray and Loading Capacity by Media Type” on page 2-5 for the amount of paper you can load at one time in the paper tray.
The printable side of the paper is not correctly loaded.	Try turning the stack of paper over in the sheet feeder. Most packages of paper indicate the printable side with an arrow on the end of the package. Make sure the printable side is loaded correctly.

Printing quality

The printed image has gaps or faint areas.	
Cause	**What to do**
The print head nozzles are clogged.	Clean the print head. See “Cleaning the Print Head” on page 8-37.
The paper quality has been degraded due to age.	Use new paper.
The printer driver settings may not be correct.	Select Automatic on the printer driver’s Main menu (Windows) or Print dialog box (Macintosh), and make sure the Media Type setting is appropriate for the type of paper loaded in the printer.

The printed image is blurred.	
Cause	**What to do**
Your paper is damp.	Do not store your paper in a damp or humid environment. Store the paper in its original packaging.
The printer driver settings may not be correct.	Select Automatic on the printer driver's Main menu (Windows) or Print dialog box (Macintosh), and make sure the Media Type setting is appropriate for the type of paper loaded in the printer.

The printed image is smeared.	
Cause	**What to do**
The paper you loaded is too thick.	If you load paper in the paper tray, set the media type lever to the Thick Paper position. If you load paper in a manual feed slot, set the Platen Gap function to Fixed (thick paper) using the printer's control panel, see page 6-9 for more information.
Special paper was loaded without the support sheet under it.	Ink Jet cards, glossy film, and EPSON Photo Paper should be loaded with the support sheet under them. Load the support sheet under the special paper. If necessary, you can use a piece of plain paper instead of the support sheet. See Chapter 1, "Printing on Various Kinds of Paper," for more information.

Multiple sheets of EPSON Photo Quality Glossy Film are loaded.	Load glossy film one sheet at a time with the loading support sheet or a piece of plain paper under it. If you need to load multiple sheets of glossy film, load only up to 30 sheets with the loading support sheet (or a piece of plain paper) under them.
Ink has leaked on the platen.	Wipe the inside of the printer as shown below with a soft, clean cloth.

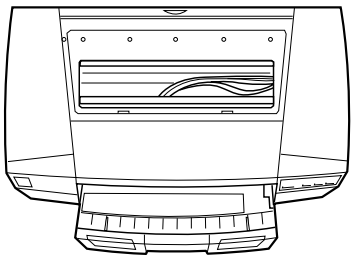

Warning:
Be careful not to touch the gears inside the printer.

The print head nozzles are clogged.	Clean the print head. See “Cleaning the Print Head” on page 8-37.

White horizontal lines appear in the printed image.

Cause	What to do
The Media Type setting in your printer driver is incorrect.	Make sure the Media Type setting matches the type of paper loaded in the printer.
The Super MicroWeave option in your printer driver is not selected.	Turn on Super in your printer driver.
One of the ink cartridges is low on ink.	Check the control panel to determine which ink out light is flashing, and replace the appropriate ink cartridge.
The print head nozzles are clogged.	Clean the print head. See “Cleaning the Print Head”on page 8-37.

Vertical printed lines are not aligned.

Cause	What to do
The print head is misaligned.	Align the print head with the Print Head Alignment utility. See “Aligning the Print Head”on page 8-41.
The printing position is misaligned.	Make sure the High Speed option in your printer driver is not selected.

Print quality is not what you expect.

Cause	What to do
The paper loaded is not the paper selected in your application or the printer driver.	Make sure you loaded the correct paper in the printer and that you selected the same media type in your application and / or the printer software. Make sure you are using paper that meets the paper requirements for this printer. See “Paper” on page A-2.

You are not printing on the correct side of the paper.	Check the paper packaging for the correct side for printing; then make sure the printable side is loaded correctly.
The printer driver settings are not correct.	Check the printer driver settings to make sure they are appropriate. If these settings are correct, check your application because some settings are overridden by application settings. Also, for more information on making printer driver settings, see online help for Windows, or Chapter 4 for Macintosh.
The High Speed setting is selected in the printer driver.	To obtain higher quality output, make sure High Speed is not selected.
For Windows 95 or NT 4.0. The printer driver failed to obtain the Printer ID from the printer automatically.	Open the Printer and Option Information dialog box from the Utility menu and input the printer ID manually.

Colors are different than you expect.

Cause	What to do
The print head nozzles are clogged.	Clean the print head. See “Cleaning the Print Head” on page 8-37.
Black ink is selected in your printer driver.	Set the Ink setting to Color.
The printable side of the paper is not correctly loaded.	Check the paper packaging for the correct side for printing; then make sure the printable side is loaded correctly.

The Media Type setting does not match the paper loaded.	Change the Media Type setting in your printer driver and the media type lever position on the paper tray to match the type of media you have loaded. Load media that matches the Media Type setting you selected in the printer driver and the media type lever position on the paper tray.
The ICM (Windows) or ColorSync (Macintosh) setting in your driver is not appropriate for your document.	Select Automatic as the Mode setting in the printer driver.
Your printer and monitor are not properly calibrated for color matching.	See the user's guides of your image-editing software and your monitor for information on calibrating your system for color matching.
Since monitors and printers produce colors differently, printed colors will not always match on-screen colors perfectly.	See the *Color Guide* that comes with the printer.

Colors are not very vibrant.

Cause	What to do
The image was printed on the wrong side of EPSON Ink Jet Paper.	Make sure that you are printing on the coated side of the paper. If necessary, flip over the paper and try printing again. If printing has not improved, clean the print heads as described on page 8-37.
The Media Type setting does not match the paper loaded.	Make sure the Media Type setting in your printer driver and the media type lever position on the paper tray match the type of media you have loaded, or load media that matches the Media Type setting.

Color dots are missing in printed graphics or characters.
The printed color image has gaps or faint areas.

Cause	What to do
The color print head nozzles are clogged.	Clean the print head. See “Cleaning the Print Head” on page 8-37.

Black dots are missing in printed graphics or characters.
The printed black image is light or faint.

Cause	What to do
The black print head nozzles are clogged.	Clean the print head. See “Cleaning the Print Head” on page 8-37.

Photographic images look grainy or rough.	
Cause	**What to do**
The printing position is misaligned.	Align the print heads with the Print Head Alignment utility. See "Aligning the Print Head" on page 8-41.
The resolution of the original image data or the resolution setting for the image in your image-editing software may be too low.	Increase the image resolution in your image-editing software. Keep in mind that higher resolution images take longer to print. Use of the EPSON PhotoEnhance 2 or PhotoEnhance feature is recommended for printing photographic images. To use this feature, click the Advanced button and select PhotoEnhance 2 or PhotoEnhance from the settings list on the printer driver's Main menu (Windows) or in the Print dialog box (Macintosh).

Printer utilities

The Status Monitor 2 searches for the printer but cannot find it.	
Cause	**What to do**
The printer is turned off.	Press the Operate button. The Operate light will come on.
The interface cable is not connected properly.	Confirm that the cable is fastened to the printer and the computer securely. If your Macintosh has a built-in modem, connect the interface cable to the Macintosh's printer port.

Your interface cable does not meet both the printer and computer specifications.	Use an interface cable that meets both the printer and computer specifications. See "Connecting the Printer to Your PC" or "Connecting the Printer to Your Macintosh" in the *Setup Guide.* Also see "Interface Specifications" in Appendix A.
The printer driver was installed after EPSON Status Monitor 2 was installed.	Reinstall EPSON Status Monitor 2 as described in the *Setup Guide.*
Your computer's parallel interface does not support bi-directional communication.	Check your computer's manual. If your system does not support bi-directional communication, you cannot use the Status Monitor 2.
The Enable bi-directional support for this printer option is not selected in the Spool Settings window.	You must select Enable bi-directional support for this printer in the Spool Settings window to use the Status Monitor. To access the Spool Settings window, click the Start button, point to Settings, and click Printers. Right-click the icon for your printer and choose Properties from the drop-down menu. Click the Details tab; then click Spool Settings. Select Enable bi-directional support for this printer.

When you clean the print head using the Head Cleaning utility, the output quality does not improve.

Cause	What to do
You attempted to clean the print head while one or both of the ink cartridges were low or out of ink.	Check the ink out lights. If one of the ink cartridges is low or empty, the Head Cleaning utility has no effect. Replace ink cartridges as needed. See page 7-2.

Clearing a Paper Jam

To clear a paper jam, follow the steps below:

1. Turn off the printer.

2. Take the paper tray out and check if there is jammed paper in the paper path.

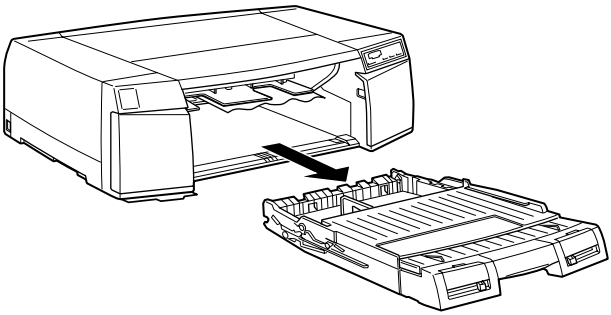

3. Gently pull the jammed paper out. If you are unable to remove the jammed paper, continue following these steps. If you can remove the jammed paper, go to step 9.

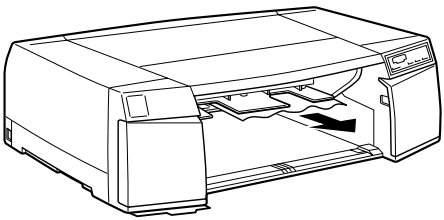

4. If you have installed the optional 250 Sheet Lower Paper Cassette, take the lower paper tray out and check the inside of the paper cassette.

5. Open the rear manual feed cover and paper path cover.

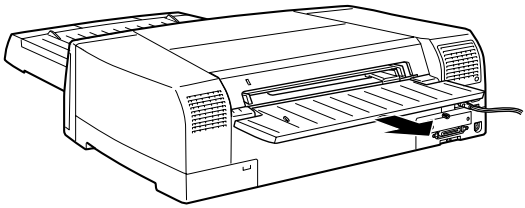

6. If necessary, open the paper guide inside.

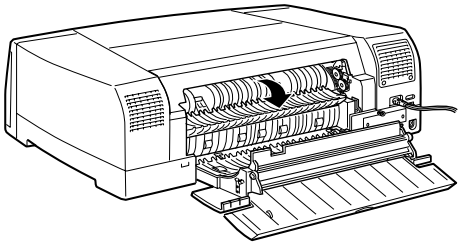

7. Gently pull the jammed paper out. If you are unable to remove the jammed paper, continue following these steps. If you can remove the jammed paper, go to step 9.

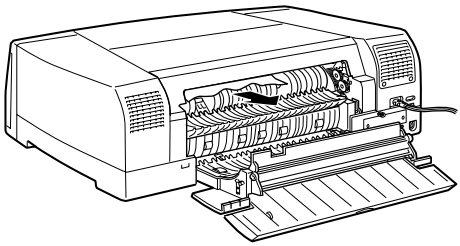

8. Open the rear manual feed slot cover and the printer cover. Gentry pull the jammed paper out.

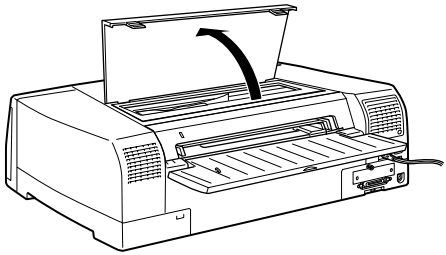

9. Make sure the printer cover, paper guide inside, paper path cover, and rear manual feed slot cover are closed. Turn the printer back on.

10. Press the Eject button to make sure paper feeds properly and see if any pieces of paper are left inside the printer.

Increasing the Print Speed

Just as printing at a high resolution requires more processing time, printing in color takes longer than printing in black because the volume of data in a color document is much greater. For this reason, it is important to be selective in your use of color if you also require a fast print speed.

Even if your document requires the highest resolution and extensive use of color, for example when printing a camera-ready composite that includes color photographs, it may still be possible to optimize the print speed by adjusting other printing conditions. Keep in mind that changing some conditions to increase the print speed may also lower print quality.

The following table shows the factors that inversely affect print speed and print quality (increasing one will decrease the other).

Print quality **Print speed**	**Lower** **Faster**	**Higher** **Slower**
Printer software settings		
Print Quality	Normal - 360 dpi	SuperFine - 1440 dpi
Halftoning	No halftoning	Error Diffusion
High Speed	On	Off
MicroWeave (Super)	Off	On
Finest Detail	Off	On
Data characteristics		
Image size	Small	Large
Resolution	Low	High

The table below shows the factors related to print speed only.

	Print speed	
	Faster	**Slower**
Printer software settings		
Ink	Black	Color
Collate*	Off	On
Reverse order*	Off	On
Rotate 180 degrees*	Off	On

	Print speed	
	Faster	**Slower**
Data characteristics		
Variety of colors	Grayscale **	Full color
Hardware resources		
System speed	Fast	Slow
HDD free space	Large	Small
Memory free space	Large	Small
Software status		
Running applications	One	Many
Virtual memory	Not in use	In use

*Varies depending on the printer software and application software you are using.

**Grayscale means using black ink only to print varying shades of gray, from pure black to pure white.

Using DMA transfer (Windows 95)

Using DMA transfer for sending print data to computer you may be able to speed up the printing. This is only available for Windows 95 systems and computers that have parallel ports which support ECP mode. See your computer's manual to determine if it supports ECP mode and DMA transfer.

Follow the instructions below to make DMA transfer available.

1. Double-click the My Computer icon, double-click the Printer icon, click EPSON Stylus Pro 5000, and select Property from the File menu. The printer driver window appears.

2. Click the Utility tab and click the Speed & Progress button on the Utility menu. The Speed & Progress dialog box appears.

3. Compare what is written under the EPSON Printer Port setting on the Speed & Progress dialog box with the table below.

Message	Action
High speed (DMA) Transfer enabled.	DMA transfer is already enabled. Click OK and close the printer driver window.
For higher data transfer rates, use DMA transfer.	Go to step 4.
<No message>	Your system cannot use DMA transfer. However if you change the parallel port setting to ECP or Enhanced using your computer's BIOS Setup program, you may be able to use DMA transfer. Consult your computer's manual or computer maker for instructions. ***Note:*** *Before you run the BIOS Setup program, uninstall the printer software. After running the Setup program, reinstall the printer software.*

4. Double-click the My Computer icon and double-click Control Panel.

5. Double-click the System icon and click the Device Manager tab.

6. Double-click the Ports (COM & LPT) icon and double-click LPT1. If you have connected your printer to a port other than LPT1, double-click the appropriate port icon.

7. Click the Resources tab and click the Use automatic settings check box to deselect Automatic Setting. (Make sure there is no check in the Use automatic settings check box.) Write down the Input/Output Range addresses shown in the Resource settings box.

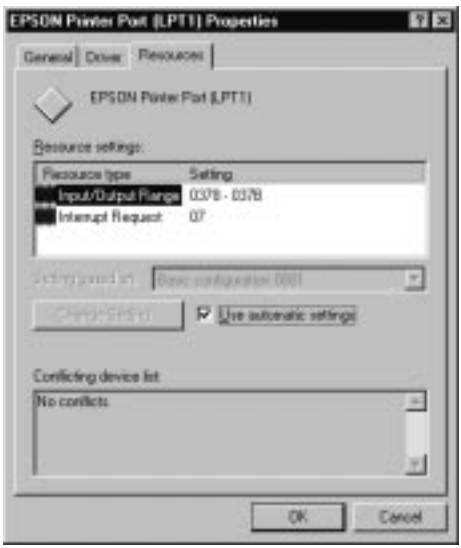

8. Select one of the basic configuration settings from the Setting Based on list that uses same Input/Output range addresses, and the both Direct Memory Access channel number and Interrupt Request number are allocated and displayed. Confirm also the Conflicting Device list box shows No conflicts.

9. Click OK to save the setting.

10. Repeat steps 1 and 2 on page 8-33 to verify whether DMA transfer has been enabled.

Note:
You may not be able to use DMA transfer on some computers even after you make the settings explained above. Consult your computer maker for information on the DMA transfer capability of your computer.

Cleaning the Print Head

If you find that the printed image is unexpectedly faint or dots in the printed image are missing, you may be able to solve these problems by cleaning the print head, which ensures that the nozzles are delivering ink properly.

You can clean the print head from your computer using the Head Cleaning utility in the printer software, or from the printer itself using the printer's control panel buttons.

Note:

- ❑ *Print head cleaning uses ink. To avoid wasting ink, clean the print head only if print quality declines. Use the Nozzle Check utility to confirm that the print head needs to be cleaned.*

- ❑ *When one or more ink out lights is flashing or on, you cannot clean the print head. Replace the appropriate ink cartridge first.*

Using the Head Cleaning utility

For Windows users:

1. Make sure the printer is on, and the ink out lights are off. If the lights are on or flashing, replace the low or empty ink cartridges with new ink cartridges.

2. Access the Utility menu as described in Chapter 5. Then click the Head Cleaning button.

3. Follow the on-screen messages.

   The ⏻ Operate light flashes while the printer performs the cleaning cycle. This operation takes about three minutes to complete.

Caution:
Never turn off the printer while the ⏻ Operate light is flashing. Doing so may damage the printer.

4. When the ⏻ Operate light stops flashing, click Print nozzle check pattern in the Head Cleaning dialog box and use the pattern to confirm that the head is clean and to reset the cleaning cycle.

   Nozzle check pattern:

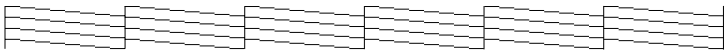

The above sample is in black and white, but the actual check pattern prints in color.

In the check pattern, if you find that any segments are missing from the test lines, as shown below, you may need to repeat the head cleaning and print the nozzle check pattern again.

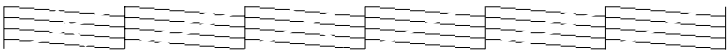

If print quality hasn't improved after repeating this procedure four or five times, follow the recommendations listed in this chapter. If the print quality still has not improved, contact your dealer.

For Macintosh users:

1. Make sure that the printer is on, and the ink out lights are off. If the lights are on or flashing, replace the empty ink cartridge.

2. Choose Utility from the Print dialog box. Then click the Head Cleaning button.

3. Follow the on-screen messages.

   The ⏻ Operate light flashes while the printer performs the cleaning cycle. This operation takes about three minutes to complete.

   Caution:
   Never turn off the printer while ⏻ Operate light is flashing. Doing so may damage the printer.

4. When the ⏻ Operate light stops flashing, click the Confirmation button in the Head Cleaning dialog box to print a nozzle check pattern and to reset the cleaning cycle. Use the check pattern to confirm the head is clean. See page 8-38 to see a sample of the nozzle check pattern.

In the check pattern, if you find that any segments are missing from the test lines, you may need to repeat the head cleaning and print the nozzle check pattern again. If print quality hasn't improved after repeating this procedure four or five times, try other recommendations listed in this chapter. If the quality still has not improved, contact your dealer.

Using the control panel

To clean the print head using the control panel buttons, follow these steps.

1. Make sure that the printer is on and the ink out lights are off. If the lights are on or flashing, replace the empty ink cartridge.

2. Press the cleaning button for three seconds. The ⏻ Operate light begins flashing, and the printer ejects any paper in the paper path and starts cleaning the print head. This operation takes about three minutes to complete.

   Caution:
   Never turn off the printer while the ⏻ Operate light is flashing. Doing so may damage the printer.

3. After the ⏻ Operate light stops flashing, print a few lines to confirm that the head is clean.

If the print quality does not improve, repeat step 2, then print a few lines to check the output. If print quality hasn't improved after repeating this procedure four or five times, follow the recommendations listed in this chapter. If the quality still has not improved, contact your dealer.

Aligning the Print Head

If you notice a misalignment of vertical lines, you may be able to solve the problem from your computer using the Print Head Alignment utility. Also you can align the print head using the control panel buttons if you are not able to use the utility (see page 6-5 for details).

Caution:
Before aligning the print head, load paper that is at least 210 mm (8.27 inches) wide; for example, A4 size paper loaded short edge first. Otherwise, the print head will spray ink directly onto the platen, which could mar future printouts.

For Windows users:

1. Make sure A4 or wider paper is loaded in the paper tray.
2. Click the Utility tab in the printer software window. Then click the Print Head Alignment button.
3. Follow the messages on your screen to align the print head.

For Macintosh users:

1. Make sure A4 or wider paper is loaded in the paper tray.
2. Choose Utility from the Print dialog box. Then click the Print Head Alignment button.
3. Follow the messages on your screen to align the print head.

Uninstalling the Printer Software (Windows 95)

Follow the instructions below to uninstall the EPSON printer driver and utilities for Windows 95.

1. Double-click the My Computer icon and double-click the Control Panel icon.

2. Double-click Add/Remove Programs.

3. Select EPSON Printer Software to uninstall the printer driver, or select EPSON Status Monitor 2 to uninstall the utility from the software list. Click Add/Remove. If you are uninstalling printer software, a dialog box appears and you need to select the printer icon for the driver you want to uninstall.

4. Follow the instructions on the screen to uninstall the software.

Note:
Before uninstalling EPSON Status Monitor 2, make sure that the background monitoring feature is turned off.

Contacting Customer Support

If your printer is not operating properly and you cannot solve the problem using the troubleshooting information in this guide, contact customer support services for assistance.

We will be able to help you much more quickly if you give us the following information:

Serial number of your printer:
(The serial number label is on the back of the printer.)

Printer model:

Brand and model of your computer:

Printer software version:
(Click the About button in your printer driver.)

Windows version (for example, NT, 95 or 3.1) you are using:

Software application(s) you normally use with your printer and their version number(s):

For United Kingdom and the Republic of Ireland Users

If you purchased your printer in the UK or the Republic of Ireland, Epson (UK) Limited provides a range of customer services and technical support.

Note:
For customers in the Republic of Ireland, please use the correct dialing codes when dialing the UK telephone numbers listed in the following sections. For example the Enquiry Desk fax number, 01442 227271, should be dialed as 0044 1442 227271 from the Republic of Ireland.

Enquiry Desk

The Enquiry Desk team can be contacted by calling 0800 220546 in the UK or 1 800 409132 from the Republic of Ireland, by faxing 01442 227271, or via the Internet at info@epson.co.uk. They can provide the following information:

- ❑ Information and literature on new EPSON products (also available from Faxon EPSON)
- ❑ Where to purchase genuine EPSON consumables, accessories and options

Customer Support

Our Customer Support team can provide the following services:

- ❑ Technical information on installing, configuring, and operating your EPSON products
- ❑ Arranging for faulty EPSON products to be repaired within the warranty period

For information on contacting our Customer Support team, please see the Service and Support Information booklet that came with your EPSON product.

If this booklet is not available, details can be found on Faxon EPSON faxback service, EPtec Bulletin Board Service or on EPSON's World Wide Web site. See below for details.

Faxon EPSON

Contact Faxon EPSON Faxback Service for:

- ❑ Literature and specifications on the latest EPSON products
- ❑ Support information including troubleshooting tips, switch settings and driver information

To use Faxon EPSON, call 01442 227332 using a touch-tone phone. You will be asked to follow a simple routine to register your document request and once you have entered your telephone and fax numbers, Faxon EPSON will fax a copy of the document catalogue to your fax machine.

When you have found the documents that you need in the catalogue, call Faxon EPSON again and enter the document ID numbers. The documents will be faxed to you automatically.

EPtec - Bulletin Board Service for latest drivers and utilities

You can call the EPSON Bulletin Board Service on 01442 227479. No membership is required. Make sure that your communications software is set to 8 data bits, 1 stop bit, no parity bit, ANSI terminal mode emulation and a modem speed of up to 28.8 Kbps. Downloading protocols supported include Xmodem, Ymodem and Zmodem. See the documentation that came with your communications software and modem for more information.

When you first connect to the Bulletin Board Service, you will be asked for your name, company name, phone number and a password (which you can invent yourself).

World Wide Web

If you can connect to the Internet and have a Web browser, you can access EPSON's World Wide Web site at http://www.epson.com. Here you will find information on the latest EPSON products, software drivers, and answers to frequently asked questions.

For Australian Users

EPSON Australia wishes to provide you with a high level of Customer Service. As well as this *User's Guide*, we provide the following sources for obtaining information:

EPSON FAXBACK

EPSON FAXBACK will fax you the latest specifications and pricing for most EPSON products offered in Australia. There is also technical information including details of the latest software and drivers available. Phone (02) 9903 9075 and the system will guide you through a number of choices before faxing the information to your fax machine.

EPSON Bulletin Board System

This is where you can download the latest software and drivers. Visit the BBS to check out the latest versions. If you have a modem, phone (02) 9417 5090.

Internet URL http://www.epson.com.au

Access the Epson Australia World Wide Web pages. Worth taking your modem here for the occasional surf! You can get the same information as offered on the EPSON FAXBACK and the EPSON Bulletin Board plus more.

Your dealer

Don't forget that your dealer can often help identify and resolve problems. The dealer should always be the first call for advice on problems. They can often solve problems quickly and easily as well as give you advice on the next step to take.

EPSON Helpdesk

EPSON Helpdesk is provided as a final backup to make sure our clients have access to advice. Operators on the Helpdesk can aid you in diagnosing hardware and software problems. They can also advise you on the latest EPSON products and where the nearest dealer or service agent is located. Many types of queries are answered here.

The Helpdesk numbers are:

Phone:	(02) 9903 9040
Fax:	(02) 9903 9189

We encourage you to have all the relevant information on hand when you ring. The more information you prepare, the faster we can help solve the problem. This information includes the *User's Guide* for your EPSON product, type of computer, operating system, application programs, and any other information you feel is required.

For Singapore Users

Contact the telephone and fax numbers below:

Phone:	(065) 337-7911
Fax:	(065) 334-1185

For Hong Kong Users

To obtain technical support as well as other after-sales services, users are welcome to contact EPSON Hong Kong Limited.

Internet home page

EPSON Hong Kong has established a local home page in both Chinese and English on the Internet to provide users with the following information:

- ❑ Product information
- ❑ Answers to Frequently Asked Questions (FAQs)
- ❑ Latest versions of EPSON printer drivers

Users can access our World Wide Web home page at:
http://www.epson.com.hk.

Electronic bulletin board system

An electronic bulletin board system (BBS) is also available to obtain printer information and the latest versions of printer drivers. You can log on to the following number for the BBS service:

BBS: (852) 2827-4244

Technical Support Hotline

You can also contact our technical staff at the following telephone and fax numbers:

Phone: (852) 2585-4399
Fax: (852) 2827-4383

For Philippines Users

To obtain technical support as well as other after sales services, users are welcome to contact the EPSON Philippines Representative Office at the telephone and fax numbers below:

Phone: (632) 813-6552
Fax: (632) 813-6545
BBS: (632) 814-0595

Appendix A

Specifications

Technical Specifications A-2
- Printing A-2
- Paper A-2
- Ink cartridges A-6
- Mechanical A-8
- Electrical A-9
- Environmental A-9
- Initialization A-9
- Safety approvals A-10

Interface Specifications A-11
- Parallel interface A-11
- Serial interface A-12

Technical Specifications

Printing

Printing method: On-demand ink jet

Nozzle configuration: 64 nozzles × 6 (black, cyan, magenta, yellow, light cyan, light magenta)

Printable columns and printing speeds:

Print quality (dots per inch)	Printable area	Maximum horizontal ink dots	CR speed (inches per second)
360 dpi	12.7 inches	4578	20 ips
720 dpi	12.7 inches	9156	20 ips

Resolution: Maximum 1440 × 720 dpi

Print direction: Bidirectional with logic seeking

Control code: ESC / P Raster

Line spacing: 1/6 inch or programmable in 1/360-inch increments

Paper feed speed: 79 milliseconds per 1/6-inch line

Input buffer: 6KB

Paper

Note:
Since the quality of any particular brand or type of paper may be changed by the manufacturer at any time, EPSON cannot attest to the quality of any non-EPSON brand or type of paper. Always test samples of paper stock before purchasing large quantities or printing large jobs.

Single sheets:

Size	Super A3/B (329 × 483 mm) A3 (297 × 420 mm) B4 (257 × 364 mm) A4 (210 × 297 mm) A5 (148 × 210 mm) B5 (182 × 257 mm) Letter (216 × 279 mm) Legal (216 × 356 mm) Half Letter (139.7 × 215.9 mm) Executive (190.5 × 254 mm)
Paper types	Plain bond paper, special papers distributed by EPSON
Thickness (for plain bond paper)	0.08 to 0.11 mm (0.003 to 0.004 inch)
Weight (for plain bond paper)	64 g/m^2 (17 lb) to 90 g/m^2 (24 lb)

Transparencies, Glossy film:

Size	Super A3/B (13 × 19 inches)* A3 (297 × 420 mm)* A4 (210 × 297 mm) Letter (216 × 279 mm) A6 (105 × 148 mm)* *Glossy film only
Paper types	Special papers distributed by EPSON

Glossy paper:

Size	Super A3/B (13 × 19 inches) A3 (297 × 420 mm) A4 (210 × 297 mm) Letter (216 × 279 mm)
Paper types	Special papers distributed by EPSON

Adhesive sheets:

Size	A4 (210 × 297 mm)
Paper types	Special paper distributed by EPSON

Envelopes:

Size	No. 10 (240 × 104 mm) DL (220 × 110 mm) C5 (162 × 229 mm) C6 (114 × 162 mm)
Paper types	Plain bond paper, air mail
Thickness	0.16 to 0.43 mm (0.006 to 0.017 inch)
Weight	45 g / m^2 (12 lb) to 75 g / m^2 (20 lb)

Index cards:

Size	A6 (105 × 148 mm) 5 × 8 inches (127 × 203 mm) 10 × 8 inches (254 × 203 mm)
Paper types	Special papers distributed by EPSON

Note:

- ❑ *Poor quality paper may reduce print quality and cause paper jams and other problems. If you encounter problems, switch to a higher grade of paper.*
- ❑ *Do not load curled or folded paper.*
- ❑ *Special papers distributed by EPSON are only usable under normal conditions:*

Temperature	*15 to 25°C (59 to 77°F)*
Humidity	*40 to 60% RH*

- ❑ *Printouts on EPSON Photo Quality Glossy Film should be stored under the following conditions:*

Temperature	*15 to 30°C (59 to 86°F)*
Humidity	*20 to 60% RH*

Printable area:

Single sheets (including panoramic size) / index cards

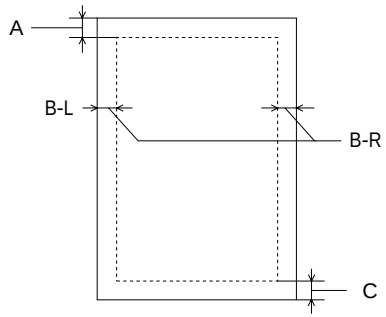

A: The minimum top margin is 3.0 mm (0.12 inch).

B: The minimum left and right margins are 3.0 mm (0.12 inch).

C: The minimum bottom margin is 14.0 mm (0.54 inch).

Envelopes

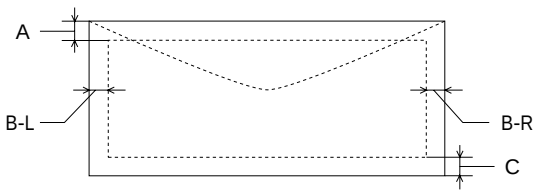

A: The minimum top margin is 3.0 mm (0.12 inch).

B: The minimum left and right margins for C5 envelopes are 3.0 mm (0.12 inch).

The minimum left margin for envelopes is 14.0 mm (0.54 inch).

The minimum right margin for envelopes is 3.0 mm (0.12 inch).

C: The minimum bottom margin for C5 envelopes is 14.0 mm (0.54 inch).

The minimum bottom margin for envelopes is 3.0 mm (0.12 inch).

Ink cartridges

Ink cartridge (S020118):

Color	Black
Print capacity*	3200 pages / A4 (ISO / IEC 10561 Letter Pattern at 360 dpi, 5% duty)
Cartridge life	2 years from production date if unopened; 6 months if opened at 25°C (77°F)
Temperature	Storage (installed): -20 to 40°C (-4 to 104°F) 1 month at 40°C (104°F) Storage (uninstalled): -30 to 40°C (-22 to 104°F) 1 month at 40°C (104°F) Transit: -30 to 60°C (-22 to 140°F) 1 month at 40°C (104°F) 120 hours at 60°C (140°F) Freezing:** -16°C (3.2°F)
Dimensions	25.1 (W) × 139.6 (D) × 105.3 mm (H)
Weight	200 g (approximate)

Ink cartridge (S020147):

Colors	Cyan, Light Cyan
Print capacity*	3000 pages (A4, 360 dpi, 5% duty each color)
Cartridge life	2 years from production date if unopened; 6 months if opened at 25°C (77°F)
Temperature	Storage (installed) : -20 to 40°C (-4 to 104°F) 1 month at 40°C (104°F) Storage (uninstalled): -30 to 40°C (-22 to 104°F) 1 month at 40°C (104°F) Transit: -30 to 60°C (-22 to 140°F) 1 month at 40°C (104°F) 120 hours at 60°C (140°F) Freezing:** -18°C (-0.4°F)
Dimensions	35.1 (W) × 140.9 (D) ×105.3 mm (H)
Weight	200 g (approximate)

Ink cartridge (S020143):

Color	Magenta, Light Magenta
Print capacity*	3000 pages (A4, 360 dpi, 5% duty each color)
Cartridge life	2 years from production date if unopened 6 months if opened at 25°C (77°F)
Temperature	Storage (installed): -20 to 40°C (-4 to 104°F) 1 month at 40°C (104°F) Storage (uninstalled): -30 to 40°C (-22 to 104°F) 1 month at 40°C (104°F) Transit: -30 to 60°C (-22 to 140°F) 1 month at 40°C (104°F) 120 hours at 60°C (140°F) Freezing:** -18°C (0.4°F)
Dimensions	35.1 (W) × 140.9 (D) × 105.3 mm (H)
Weight	200 g (approximate)

Ink cartridge (S020122):

Color	Yellow
Print capacity*	3200 pages (A4, 360 dpi, 5% duty)
Cartridge life	2 years from production date if unopened; 6 months if opened at 25°C (77°F)
Temperature	Storage (installed) : -20 to 40°C (-4 to 104°F) 1 month at 40°C (104°F) Storage (uninstalled): -30 to 40°C (-22 to 104°F) 1 month at 40°C (104°F) Transit: -30 to 60°C (-22 to 140°F) 1 month at 40°C (104°F) 120 hours at 60°C (140°F) Freezing:** -18°C (-0.4°F)
Dimensions	25.1 (W) × 139.6 (D) × 105.3 mm (H)
Weight	200 g (approximate)

*The print capacity may vary depending on how often you use the print head cleaning function.

** It thaws and is usable after approximately 3 hours at 25°C (77°F).

Caution:

- *EPSON recommends the use of genuine EPSON ink cartridges. Other products not manufactured by EPSON may cause damage to your printer not covered by EPSON's warranties.*
- *Do not use an ink cartridge if the date on the package has expired.*

Mechanical

Paper feed method:	Friction
Paper path:	Paper tray, front and rear manual feed slots, Optional lower paper cassette
Paper Tray capacity:	250 sheets at 64 g / m^2 (17 lb) paper
Dimensions:	Storage Width: 640 mm (25.2 inches) Depth: 439 mm (17.3 inches) Height: 224 mm (8.8 inches) Printing (on A3 size paper) Width: 640 mm (25.2 inches) Depth: 704 mm (27.7 inches) Height: 224 mm (8.8 inches) Printing (on A4 size paper, optional lower paper cassette installed) Width: 640 mm (25.2 inches) Depth: 544 mm (21.4 inches) Height: 318 mm (12.5 inches)
Weight:	22 kg (48.5 pounds) without the ink cartridges

Electrical

	120V Model	220–240V Model
Input voltage range	99 to 132V	198 to 264V
Rated frequency range	50 to 60 Hz	
Input frequency range	49.5 to 60.5 Hz	
Rated current	1.0A	0.5A
Power consumption	Approx. 32W (ISO/IEC 10561 Letter Pattern)	

Note:
Check the label on the back of the printer for the voltage of your printer.

Environmental

Temperature:
Operation: 10 to 35°C (50 to 95°F)
Storage:* -20 to 60°C (-4 to 140°F)
1 month at 40°C (104°F)
120 hours at 60°C (140°F)

Humidity (without condensation):
Operation: 20 to 80% RH
Storage:* 5 to 85% RH

*Stored in shipping container

Initialization

The printer can be initialized (returned to a fixed set of conditions) in these ways:

Hardware initialization	* The printer is turned on. * The printer receives an $\overline{\text{INIT}}$ signal from the parallel interface.
Software initialization	* Software sends the ESC @ (initialize the printer) command.

Hardware initialization

When the printer is turned on, the printer mechanism is initialized and the input data buffer and print buffer are cleared. Printer settings are returned to their default values. However, the printer mechanism is not initialized if the printer is turned on within ten seconds after turning it off. In this case, the printer caps the print head, and ejects any paper in the paper path.

Software initialization

Clears the print buffer and returns printer settings to their default values. However, software initialization does not initialize the printer mechanism or clear the data buffer.

Safety approvals

Safety standards:

U.S. model	UL 1950, CSA C22.2 No.950
European model	EN60950 (VDE and NEMKO)

EMC:

U.S. model	FCC part 15 subpart B class B CSA C108.8 class B
European model	EN 55022 (CISPR Pub. 22) class B EN 61000-3-2 EN 61000-3-3 EN 50082-1 IEC801-2 IEC801-3 IEC801-4
Australian model	AS / NZS 3548 class B

Interface Specifications

Your printer is equipped with an 8-bit parallel interface and a serial interface.

Parallel interface

The built-in parallel interface supports compatibiliy and ECP mode:

Compatibility mode

Foward channel

Data format:	8-bit parallel, IEEE-1284 compatibility mode
Synchronization:	$\overline{\text{STROBE}}$ pulse
Handshake timing:	BUSY and $\overline{\text{ACKNLG}}$ signals
Signal level:	TTL compatible
Connector:	57-30360 Amphenol connector or equivalent

Reverse channel

Transmission mode:	IEEE-1284 Nibble mode
Adaptable connector:	57-30360 Amphenol connector or equivalent
Synchronization:	Refer to the IEEE-1284 specification
Handshaking:	Refer to the IEEE-1284 specification
Signal level:	IEEE-1284 Level 1 device
Data transmission timing:	Refer to the IEEE-1284 specification

ECP Mode

Transmission mode:	IEEE-1284 ECP mode
Adaptable connector:	57-30360 Amphenol connector or equivalent
Synchronization:	Refer to the IEEE-1284 specification
Handshaking:	Refer to the IEEE-1284 specification
Signal level:	IEEE-1284 Level 1 device
Data transmission timing:	Refer to the IEEE-1284 specification

Serial interface

The printer's built-in serial interface is based on the RS-423 standard. This interface has the following characteristics:

Standard:	Based on RS-423
Synchronization:	Synchronous
Bit rate:	Approx. 1.8M bps
Handshaking:	X-ON / X-OFF DTR protocol
Word format:	
Data bit	8 bits
Parity bit	None
Start bit	1 bit
Stop bit	1 bit
Connector:	8-pin mini-circular connector
Recommended cable:	Apple System Peripheral-8 cable (Part number M0197)

Glossary

The following definitions apply specifically to printers.

application
A software program that helps you carry out a particular task, such as word processing or financial planning.

ASCII
American Standard Code for Information Interchange. A standardized coding system for assigning numerical codes to letters and symbols.

banding
The horizontal lines that sometimes appear when printing graphics. This occurs when the print head carriage return is misaligned. See also *MicroWeave*.

bidirectional printing
Printing in which the print heads print in both directions. This increases the speed of printing.

bit
A binary digit (0 or 1), which is the smallest unit of information used by a printer or computer.

brightness
The lightness or darkness of an image.

buffer
The portion of the printer's memory used to store data before printing it.

byte
A unit of information consisting of eight bits.

character table
A collection of letters, numbers, and symbols that provides you with the characters used in a particular language.

CMYK
Cyan (blue-green), magenta, yellow, and black. These colored inks are used to create the subtractive system array of printed colors.

ColorSync
Macintosh software that is designed to help you get WYSIWYG (what you see is what you get) color output. This software prints colors as you see them on your screen.

default
A value or setting that takes effect when the equipment is turned on, reset, or initialized.

dithering
A halftoning method in which dots are arranged in an orderly pattern. Dithering works best for printing images with solid colors, such as charts and graphs. See also *Halftoning*.

dot matrix
A method of printing in which each letter or symbol is formed by a pattern (matrix) of individual dots.

dpi
Dots per inch. The dpi measures the resolution. See also *resolution*.

driver
A software program that sends instructions to a computer peripheral to tell it what to do. For example, your printer driver accepts print data from your word processing application and sends instructions to the printer on how to print this data.

EPSON PhotoEnhance or PhotoEnhance 2
An advanced image enhancement feature developed by EPSON. Selecting PhotoEnhance in your printer driver produces sharper images and more vivid colors by automatically adjusting the contrast, saturation, and brightness of the original image data.

Error Diffusion
Error diffusion blends individual colored dots with the colors of the surrounding dots to create the appearance of natural colors. By blending colored dots, the printer can achieve excellent colors and subtle color gradation.

ESC/P
Abbreviation for Epson Standard Code for Printers. This system of commands gives you control of your printer from your computer. It is standard for all EPSON printers and supported by most application programs for personal computers.

ESC/P Raster
A command language that gives you control of your printer from your computer. Commands in this language produce laser-like features, such as enhanced graphics printing.

Finest Detail
This printer driver setting automatically makes your printed images sharper and clearer. Be aware that this may increase the time required for printing.

font
A style of type designated by a family name.

grayscale
A scale of shades of gray from black to white. Grayscale is used to represent colors when printing with black ink only.

halftones
Patterns of black or colored dots used to reproduce an image.

halftoning
A method of using dot patterns to represent an image. Halftoning makes it possible to produce varying shades of gray using only black dots, or a nearly infinite array of colors using only a few colors of dots.

high speed printing
Printing in which images are printed in both directions. This provides faster printing. This is also called bidirectional printing.

ICM
Image Color Matching. This setting uses the Windows 95 color matching method to automatically match the colors in your printout with the colors displayed on your screen.

initialization
Returns the printer to its defaults (fixed set of conditions). This happens every time you turn on the printer or reset the printer.

ink jet
A method of printing in which each letter or symbol is formed by precisely spraying ink onto paper.

interface
The connection between the computer and a peripheral such as a printer. Generally, printers have two interfaces, parallel and serial. A parallel interface transmits data one byte, or eight bits, at a time. A serial interface transmits data one bit at a time.

loading position
The position to which the paper is automatically loaded.

ips
Inches per second. This scale is used to measure the print head speed.

media
Materials upon which data is printed, such as envelopes, plain paper, special paper, and transparency film.

MicroWeave
Printing in which images are printed in finer increments to reduce the possibility of banding and to produce laser-like images. See also *banding.*

monochrome
Printing with only one color of ink, which is generally black ink.

parallel interface
See *interface.*

power-on functions
These are special functions, such as a printer operation check, that you can perform by holding down a control panel button while turning on the printer.

printable area
The area of a page on which the printer can print. It is smaller than the physical size of the page due to margins.

printer driver
A software program that sends commands for using the features of a particular printer. Often shortened to "driver." See also *driver*.

printer operation check
A method for checking the operation of the printer. When you perform a printer operation check, the printer prints the ROM version, a list of printer setting, and a nozzle check pattern.

print head alignment
A maintenance procedure you should perform when the black and color inks on your printout are misaligned or the printout seems fuzzy.

print server
The print server acts as a post office for all print jobs sent over a network. It receives the jobs and then distributes them to the assigned printer. It also holds extra print jobs while the printer is busy. See also *print queue*.

print queue
If your printer is connected to a network, print jobs that are sent to the printer while it is busy are stored in a waiting line, or print queue, until they can be printed.

RAM
Random Access Memory. The portion of the printer's memory used as a buffer. All data stored in RAM is lost when the printer is turned off.

reset
To return a printer to its defaults either by sending a command, an $\overline{\text{INIT}}$ signal, or by turning the printer off and then back on.

resolution
The number of dots per inch used to represent an image.

ROM
Read Only Memory. A portion of memory that can only be read and cannot be used for data storage. ROM retains its contents when you turn off the printer.

RGB
Red, green, and blue. These colors, in phosphors irradiated by the computer monitor's electron gun, are used to create the additive array of screen colors.

screen pattern
This feature prints shaded areas as they appear on screen, instead of printing them as halftones.

serial interface
See *interface*.

spool
The process by which the printer driver converts the print data into codes that your printer understands. This data is then sent to the printer directly or to the print server.

spool manager
A software program that converts print data into codes that your printer understands. See also *spool*.

status monitor
A software program that allows you to check the printer's status, such as the amount of ink remaining before printing.

subtractive colors
Colors produced by pigments that absorb some colors of light and reflect others. See also *CMYK*.

unidirectional printing
Printing in which the print head prints in one direction only. Unidirectional printing is useful for printing graphics because it allows more precise vertical alignment than bidirectional printing.

WYSIWYG
What-you-see-is-what-you-get. This term is used to describe printout that looks exactly like it appears on screen.

Index

For your convenience, the *Setup Guide* and *Reference Guide* contain the same index, which includes entries for both manuals. See the *Setup Guide* for page numbers listed after "*Setup*," and see the *Reference Guide* for page numbers listed after "*Reference*."

250 Sheet Lower Paper Cassette, *Setup* 1-9, 3-2, *Reference* 2-2, 2-15
  installing, *Setup* 4-2-5
  moving, *Setup* 4-5
250 Sheet Paper Tray, *Setup* 1-9
  using, *Setup* 4-6, *Reference* 2-16-19
  loading paper, *Reference* 2-15
  See also paper tray

A

Active path, *Reference* 5-23
Advanced Photo setting
  Macintosh, *Reference* 4-7
  Windows, *Reference* 3-6. *See also online help*
Advanced setting
  Macintosh, *Reference* 4-2, 4-6-17
  Windows, *Reference* 3-2, 3-5-9. *See also online help*
Alignment, print head, *Reference* 5-4, 6-5-7, 8-41. *See also* Utilities
AppleTalk*, using, *Setup* 2-33-34
Automatic
  mode
    Macintosh, *Reference* 4-12
    Windows. *See online help*
  setting
    Macintosh, *Setup* 3-13, *Reference* 4-3-6
    Windows, *Setup* 3-10, *Reference* 3-5-6

B

Background
  monitoring†, *Reference* 5-15-16, 5-21-22
  printing*, *Reference* 4-25-26
Back light film, *Setup* 1-12, *Reference* 1-4, 1-16-18
Brightness setting
  Macintosh, *Reference* 4-12
  Windows. *See online help*
Buttons, *Setup* 1-3, 1-4
  Cleaning, *Setup* 1-4, *Reference* 6-2
  Eject, *Setup* 1-4, *Reference* 6-2
  Operate, *Setup* 1-4, *Reference* 6-2
  Reset, *Setup* 1-4, *Reference* 6-2

C

Cables. *See* Interface cables
Capacity, paper loading, *Reference* 2-5-6
Cartridges. *See* Ink cartridges
Chooser*, selecting printer with, *Setup* 2-30-34
Cleaning
  printer, *Reference* 7-6
  print head, *Reference* 8-37-40
Cleaning sheets, *Setup* 1-12, *Reference* 1-6-7
Coated paper. *See* Special paper

*Macintosh only
†Windows only

Color Adjustment settings
Macintosh, *Reference* 4-11
Windows. *See online help*
Colorimetric setting*, *Reference* 4-15
Color
settings
Macintosh, *Reference* 4-11-15
Windows. *See also online help*
slide bars
Macintosh, *Reference* 4-12
Windows. *See online help*
ColorSync*, *Setup* 2-29
setting, *Reference* 4-8, 4-14-15
Computer requirements, *Setup* 1-5-7
Configuration setting*, *Reference* 5-9
Connecting the printer
to a Macintosh, *Setup* 2-23
to a PC, *Setup* 2-9
Consumable products, *Setup* 1-10-12
Consumables menu†, *Reference* 5-18
Contrast setting
Macintosh, *Reference* 4-13
Windows. *See online help*
Control panel, *Setup* 1-3-5, *Reference* 6-2-10
power-on functions. *See* power-on functions
Copies setting
Windows, *Reference* 3-13
Current Settings display
Macintosh, *Reference* 4-6
Windows, *Reference* 3-6
Current Status menu†, *Reference* 5-17
Customer support, *Reference* 8-43-49
Customizing print settings
Macintosh, *Reference* 4-9-17
Windows, *Reference* 3-8-9
Custom paper size
Macintosh, *Reference* 4-20
Windows, *Setup* 3-11. *See also online help*
Cyan setting
Macintosh, *Reference* 4-13
Windows. *See online help*

D

Despooler†, *Reference* 3-18-19. *See also online help*
Diagnosing the problem, *Reference* 8-2-9
Dithering. *See* Fine Dithering setting
DMA Transfer setting†, *Reference* 5-8, 8-33-36
Driver. *See* Printer driver
Driver disk creation†, *Reference* 2-10, 2-12, 2-22

E

ECP mode, parallel interface setting, *Reference* 6-8
Edge guides, *Setup* 1-2, 3-4, 3-6, *Reference* 2-10, 2-12, 2-21-22
Envelopes
loading, *Reference* 1-10-12. *See also* Paper loading
printable area, *Reference* A-5
specifications, *Reference* A-4

*Macintosh only
†Windows only

EPSON
Despooler†, *Reference* 3-18-19
Monitor3*, *Reference* 4-25-26
Namer*, *Setup* 2-29-30
PhotoEnhance†, *Reference* 3-7
PhotoEnhance 2
Macintosh, *Reference* 4-8, 4-13
Windows, *Reference* 3-7
Photo Paper, *Setup* 1-12, *Reference* 1-4, 1-18-22
Printer Port setting, *Reference* 5-8
Progress Meter†, *Reference* 3-17, 5-8
RIP Station 5000, *Setup* 1-10
special media, *Setup* 1-10. *See also* Special paper
Spool Manager†, *Reference* 3-16-19
Status Monitor*, *Setup* 2-28, *Reference* 5-4, 5-23-24, 8-7
Status Monitor 2†, *Reference* 5-3, 5-10-22, 8-7
installing, *Setup* 2-15-16
Stylus Printer Driver Package*, *Setup* 2-28-29
StylusRIP, *Setup* 1-10
Error
Diffusion setting
Macintosh, *Reference* 4-15
Windows. *See online help*
indicators, *Reference* 8-2-6

F

Feed slot. *See* manual feed slot
Fine-720 dpi setting
Macintosh, *Reference* 4-16
Windows. *See online help*

See also Print Quality settings

Fine Dithering setting
Macintosh, *Reference* 4-15
Windows. *See online help*
See also Halftoning settings
Finest Detail setting
Macintosh, *Reference* 4-18
Windows. *See online help*
Flip Horizontal setting
Macintosh, *Reference* 4-15
Windows. *See online help*

G

Glossy
film, *Setup* 1-11, *Reference* 1-4, 1-13-14. *See also* Special paper
paper, *Setup* 1-11, *Reference* 1-3, 1-7-9. *See also* Special paper

H

Halftoning settings
Macintosh, *Reference* 4-15
Windows. *See online help*
Head. *See* Print head
Head Cleaning utility. *See* Utilities
Help, online, *Setup* 2-10, *Reference* 3-19-20
High Speed
setting
Macintosh, *Reference* 4-17
Windows. *See online help*
Copies setting†, *Reference* 5-8
Copy Folder setting†, *Reference* 5-9

*Macintosh only
†Windows only

I

ICM setting†, *Reference* 3-7. *See also online help*
Index cards. *See* Ink jet cards
Ink jet
  cards, *Setup* 1-11, *Reference* 1-3, 1-7-9
  paper, *Setup* 1-10-12, *Reference* 1-3, 1-7-9. *See also* Special paper
Ink
  cartridges, *Setup* 1-10
  installing, *Setup* 2-5-8
  replacing, *Reference* 7-2-5
  specifications, *Reference* A-6-8
  low, *Setup* 1-4, *Reference* 7-2-3, 8-3-5
  out, *Setup* 1-4, *Reference* 7-2-3, 8-3-5
  remaining level,
    Macintosh, *Reference* 5-24
    Windows, *Reference* 5-18
Ink setting
  Macintosh, *Reference* 4-6
  Windows. *See online help*
Installing
  250 Sheet Lower Paper Cassette, *Setup* 4-2-5
  ink cartridges, *Setup* 2-5-8
  interface cards, *Setup* 4-8-9
  EPSON Status Monitor 2†, *Setup* 2-15
  Macintosh printer software, *Setup* 2-26-34
  memory, *Setup* 4-10-13
  optional interface cards, *Setup* 4-8
  paper tray, *Setup* 2-4
  Windows printer software, *Setup* 2-11-23
Interface
  cables, *Setup* 1-9
  cards, *Setup* 1-8
  cards, using*, *Setup* 2-25-26, 4-7
  cards, installing, *Setup* 4-8-9
  parallel, *Reference* A-11-12
  serial, *Reference* A-12
  specifications, *Reference* A-10-12

L

Layout
  dialog box*, *Reference* 4-22-23
  menu†, *Reference* 3-14-15
Lights, *Setup* 1-3-5, *Reference* 7-2-3, 8-2-6
  black ink out, *Setup* 1-3-5, *Reference* 7-2-3, 8-2-6
  cyan ink out, *Setup* 1-3-5, *Reference* 7-2-3, 8-2-6
  magenta ink out, *Setup* 1-3-5, *Reference* 7-2-3, 8-2-6
  yellow ink out, *Setup* 1-3-5, *Reference* 7-2-3, 8-2-6
  paper out (manual feed slot), *Setup* 1-3-5, *Reference* 8-2-6
  paper out (optional lower paper tray), *Setup* 1-3-5, *Reference* 8-2-6
  paper out (paper tray), *Setup* 1-3-5, *Reference* 8-2-6
  Operate, *Setup* 1-3-5, *Reference* 8-2-6
Loading paper. *See* Paper

*Macintosh only
†Windows only

M

Main menu†, *Setup* 3-9-10. *See also online help*
Maintenance, *Reference* Chapter 7
Manual feed slot, *Setup* 3-2, *Reference* 2-2
  loadable paper sizes, *Reference* 2-3-4
  loading paper, *Reference* 2-20-23
Matching, color
  Macintosh, *Reference* 4-11-15
  Windows, *Reference* 3-7. *See also online help*
Media type
  cards. *See* paper size and media type cards
  lever, *Setup* 1-2. *See also* media type settings
Media Type settings, *Setup* 3-7-8, *Reference* 1-8-9, 1-11-12, 1-14, 1-17, 1-20, 2-13-14
  Macintosh, *Reference* 4-4-6
  Windows, *Reference* 3-10-12. *See also online help*
Memory, installing, *Setup* 4-10-13
MicroWeave setting
  Macintosh, *Reference* 4-17
  Windows. *See online help*
Mode setting
  Macintosh, *Reference* 4-12
  Windows. *See online help*
Monitoring setting†, *Reference* 5-15, 5-20
More Settings dialog box
  Macintosh, *Reference* 4-9
  Windows, *Reference* 3-8. *See also online help*

N

Network printing
  with Windows 95, *Setup* 2-16-17
  installing printer software in Windows NT 4.0, *Setup* 2-18-21
  AppleTalk, *Setup* 2-25, 2-27, 2-32
No Color Adjustment mode
  Macintosh, *Reference* 4-12
  Windows. *See online help*
No Halftoning setting
  Macintosh, *Reference* 4-15
  Windows. *See online help*
  See also Halftoning settings
Normal-360 dpi setting
  Macintosh, *Reference* 4-16
  Windows. *See online help*
  See also Print Quality settings
Nozzle check and printer settings, *Reference* 6-4
Nozzle Check utility
  Macintosh, *Setup* 2-28, *Reference* 5-4
  Windows, *Reference* 5-4

O

Online help†, *Setup* 2-10, *Reference* 3-19-20
Options, *Setup* 1-8-10
Orientation setting
  Macintosh, *Reference* 4-19
  Windows *Reference* 3-13. *See also online help*

*Macintosh only
†Windows only

P

Page Setup dialog box*, *Setup* 3-12, *Reference* 4-18
Panoramic photo paper, *Setup* 1-12, *Reference* 1-4, 1-18-22
Paper
- cassette, optional. *See* 250 Sheet Lower Paper Cassette
- jam, *Setup* 1-5, *Reference* 8-29-31
- loading, *Setup* 3-2-8, *Reference* 2-3-23
- *See also* Special Paper
- out, *Setup* 1-4-5, *Reference* 8-3
- path, *Setup* 3-2, *Reference* 1-7, 1-10, 1-13, 1-16, 1-19, 2-2-4
- size, loadable, *Reference* 2-3
- source, *Setup* 3-11-12, *Reference* 2-16, 4-19. *See also* paper path
- specifications, *Reference* A-2-5
- storing, *Reference* 1-9, 1-12, 1-18, 1-22
- tray. *See* Paper tray
- *See also* Special paper

Paper, matching with media type lever position, *Reference* 1-8, 1-11, 1-14, 1-20
Paper, matching with Media Type setting, *Reference* 1-9, 1-11, 1-17, 1-20
- Macintosh, *Reference* 4-4-6
- Windows, *Reference* 3-10-12

Paper menu†, *Setup* 3-10-11, *Reference* 3-13-14. *See also online help*
Paper remaining level
- Macintosh, *Reference* 5-24
- Windows, *Reference* 5-18

Paper size
- cards, *Setup* 2-2, 3-8, *Reference* 2-8
- lever, *Setup* 1-2
- verification, *Reference* 6-7
- verification error, *Reference* 8-6

Paper Size settings, *Reference* 1-8-9, 1-11-12, 1-14, 1-17, 1-20
- Macintosh, *Reference* 4-18-21
- Windows, *Reference* 3-13. *See also online help*

Paper Source setting
- Macintosh, *Reference* 4-19
- Windows. *See online help*

Paper tray, *Setup* 1-2, 2-2, 3-2-7, 4-6, *Reference* 1-6-7, 1-10, 1-13, 1-16, 1-19, 2-2
- installing, *Setup* 2-4
- loadable paper size, *Reference* 2-3-4
- loading capacity by media type, *Reference* 2-5-6
- loading paper, *Reference* 2-7-19
- optional, lower, *Setup* 1-9, 4-6, *Reference* 2-15-19
- switching, between printer and paper cassette, *Reference* 2-17-19

Parallel interface ECP mode setting, *Reference* 6-8
Perceptual setting*, *Reference* 4-14
PhotoEnhance†, *Reference* 3-7
PhotoEnhance 2
- Macintosh, *Reference* 4-8, 4-13
- Windows, *Reference* 3-7

Photo paper, *Setup* 1-12, *Reference* 1-4, 1-18-22, 2-6. *See also* Special paper
Photo quality paper, *Setup* 1-11-12, *Reference* 1-3-4, 1-7-18, 2-5-6. *See also* Special paper

*Macintosh only
†Windows only

Photo-realistic mode
Macintosh, *Reference* 4-12
Windows. *See online help*
Photo setting
Macintosh, *Reference* 4-7
Windows, *Reference* 3-7. *See also online help*
Platen gap adjustment, *Reference*, 6-9
Power-on functions, *Reference* 6-3-9
Predefined settings
Macintosh, 5-6-8
Windows, 4-6-7. *See also online help*
Print
job, checking, *Reference* 3-16-19
quality, *Reference* 8-20-27
speed, *Reference* 8-31-36
Printable Area
setting
Macintosh, *Reference* 4-20
Windows *Reference* 3-14. *See also online help*
specifications, B-5
Print dialog box*, *Setup* 3-13, *Reference* 4-3
Printer
cleaning, *Reference* 7-6
operation check, *Reference* 8-7-9
parts, *Setup* 1-2-3
port, EPSON, *Reference* 5-8
stand, *Setup* 2-4
transporting, *Reference* 7-8-9
unpacking, *Setup* 2-2
Printer and Option Information†, *Reference* 5-5-6
Printer driver
Macintosh, *Setup* 2-26-34, 3-12-13. *See also* Printer software for Macintosh
Windows, *Setup* 2-10-23, 3-9-11, *Reference* 3-2-20. *See also online help* and Printer software for Windows
Printer Information menu†, *Reference* 5-19
Printer software for Macintosh
accessing, *Setup* 3-12, *Reference* 4-3
Advanced setting, *Reference* 4-2, 4-6-17
Automatic setting, *Setup* 3-13, *Reference* 4-2-6
customized settings, *Reference* 4-6-17
installing, *Setup* 2-26-34
predefined settings, *Reference* 4-6-8
Printer software for Windows
accessing, *Setup* 3-9, *Reference* 3-3-5
Advanced setting, *Reference* 3-2, 3-5-9. *See also online help*
Automatic setting, *Setup* 3-10, *Reference* 3-2, 3-5-6
customized settings, *Reference* 3-2, 3-8-9
installing, *Setup* 2-11-23
predefined settings, *Reference* 3-2, 3-6-7
See also online help
Printer status
Macintosh, *Reference* 5-23-24
Windows, *Reference* 3-16-19, 5-10-22
Printer status window†, *Reference* 5-13, 5-16-19

*Macintosh only
†Windows only

Printer utilities. *See* Utilities
Print head
alignment, *Reference* 5-4, 6-5-7, 8-41
cleaning, *Reference* 5-4, 8-37-40
Printing, basics
Macintosh, *Setup* 3-12-13
Windows, *Setup* 3-9-11
Printing problems. *See* Troubleshooting
Print Layout setting
Macintosh, *Reference* 4-24
Windows, *Reference* 3-15
Print Order setting
Macintosh, *Reference* 4-25
Windows. *See online help*
Print Quality settings
Macintosh, *Reference* 4-16-17
Windows. *See online help*
Print settings
Macintosh, *Reference* 4-2-26. *See also* Printer software for Macintosh
Windows, *Reference* 3-2-20. *See also online help* and Printer software for Windows
Printout method,
Macintosh, *Reference* 4-22-25
Windows, *Reference* 3-12-15
Printout style,
Macintosh, *Reference* 4-22-25
Windows, *Reference* 3-12-15
Profile setting*, *Reference* 4-14
Progress Meter†, *Reference* 3-17, 5-8
Proportional Printing setting,
Macintosh, *Reference* 4-22
Windows, *Reference* 3-15

Q

Quality vs. Speed slide bar
Macintosh, *Setup* 3-13, *Reference* 4-3
Windows, *Setup* 3-10, *Reference* 3-6. *See also online help*

R

Reduce or Enlarge setting
Macintosh, *Reference* 4-20
Windows, *Reference* 3-15
Rendering Intent setting*, *Reference* 4-14
Replacing an ink cartridge. *See* Ink cartridges
Rotate by 180 degrees setting
Macintosh, *Reference* 4-20
Windows, *Reference* 3-13

S

Safety
approvals, *Reference* A-10
instructions, *Setup* 1-5, *Reference* 1-5
Saturation setting
Macintosh, *Reference* 4-13, 4-15
Windows. *See online help*
Self adhesive sheets, *Setup* 1-12, *Reference* 1-16-18
Serial interface, using, *Setup* 2-24-25, *Setup* 2-31-32
Show Progress Meter†, *Reference* 5-8
SIMM. *See* memory
Special media, *Setup* 1-10, *Reference* 1-2-22. *See also* Special paper

*Macintosh only
†Windows only

Special paper, *Setup* 1-10, *Reference* 1-2-22
cleaning sheets, *Setup* 1-12, *Reference* 1-6-7
loading, *Reference* 1-7-22
Specifications, *Reference* A-2-12
electrical, *Reference* A-9
environmental, *Reference* A-9
ink cartridges, *Reference* A-6-8
initialization, *Reference* A-9-10
interface, *Reference* A-11-12
mechanical, *Reference* A-8
paper, *Reference* A-2-5
printable area, *Reference* A-5
printing, *Reference Reference* A-2
safety approvals, A-10
Speed & Progress†, *Reference* 5-7-9
Spool Manager†, *Reference* 3-16-19
Status Alert dialog box†, *Reference* 5-20-21
Status Monitor. *See* EPSON Status Monitor
SuperFine - 1440 dpi setting
Macintosh, *Reference* 4-16
Windows. *See online help*
Super (MicroWeave) setting
Macintosh, *Reference* 4-17
Windows. *See online help*
System requirements, *Setup* 1-5-7

T

Text / Graph setting
Macintosh, *Reference* 4-7
Windows, *Reference* 3-7. *See also online help*
Text setting
Macintosh, *Reference* 4-8
Windows, *Reference* 3-7. *See also online help*
Transparencies, *Setup* 1-11, *Reference* 1-13-14
Transporting the printer, *Reference* 7-7-9
Troubleshooting, *Reference* Chapter 8
operation, *Reference* 8-11-16
paper handling, *Reference* 8-16-20
power supply, *Reference* 8-10
printing quality, *Reference* 8-20-27
printer utilities, *Reference* 8-27-28

U

Uninstalling printer software†, *Reference* 8-42
Unpacking the printer, *Setup* 2-2
User Defined Paper Size dialog box
Macintosh, *Reference* 4-20-21
Windows. *See online help*
Utilities
Driver disk creation†, *Setup* 2-12
Macintosh, *Reference* 5-2-24
Windows, *Reference* 5-2-24
Utility menu, *Reference* 5-2-3. *See also online help*

V

Vivid mode
Macintosh, *Reference* 4-12
Windows. *See online help*

*Macintosh only
†Windows only

W

Watermark setting
Macintosh, *Reference* 4-23-24
Windows, *Reference* 3-15

Y

Yellow setting
Macintosh, *Reference* 4-13
Windows, *See online help*

*Macintosh only
†Windows only

COLOR INK JET PRINTER

EPSON *Stylus*™ Pro 5000

Reference Guide

Printed in Japan 97.11-.1